Hydrogen Business Council

Recommendations for an Ontario Low-Carbon Hydrogen Strategy

Guidance on Policies & Priority Actions for Deploying Low-Carbon Hydrogen Technologies in Ontario

January 2021

Hydrogen Business Council

Author

Key Contributors

Faris Elmanakhly

Candidate for MASc
Faculty of Engineering, Department of Mechanical and Mechatronics Engineering
University of Waterloo

Andre DaCosta

Candidate for MASc
Faculty of Engineering, Department of Chemical Engineering
University of Waterloo

Brittany Berry

Communications Strategist & Advisor
Science Concepts International (SCI)

Academic Advisors

XiaoYu Wu

Assistant Professor
Faculty of Engineering, Department of Mechanical and Mechatronics Engineering
University of Waterloo

Michael Fowler

Professor
Faculty of Engineering, Department of Chemical Engineering
University of Waterloo

Industry Advisor

Robert Stasko

Executive Director
Hydrogen Business Council (HBC)
Principal, CEO
Science Concepts International (SCI)
Founder
Zero Carbon Solutions

Other Contributors

The following contributors offered valuable feedback and input during the report writing process. While comments were accepted from numerous contributors, the following is not an exhaustive list.

Aditya Ramesh

Project Manager, Electric Bus and Coach Bus
CUTRIC

Arthur Potts

VP of Public Affairs
True Energy Inc.

Azadeh Maroufmashat

Postdoctoral Fellow
Faculty of Engineering, Department of Chemical Engineering
University of Waterloo

Brad Chittick

Board Chair
Hydrogen Business Council

Ivette Vera-Perez

Account Manager
Mitacs

Kamiel Gabriel

Professor
Department of Mechanical and Manufacturing Engineering
UOIT

Luke Dolenc

Modernization
NPX Innovation

Maike Althaus

Executive Director
OCTIA

Mark Kirby

President & CEO
CHFCA

Matthew Fairlie

Vice Chairman
Next Hydrogen

Mitchell Lowery

Candidate for BSc
Faculty of Science, Department of Biology; Faculty of Arts, Department of Economics
University of Waterloo

Patrick Carr

Business Development Manager
2G Energy

Paul O'Brien

Assistant Professor
Lassonde School of Engineering
York University

Rob Harvey

Director, Energy Infrastructure
Cummins

Roger Lounsbury

President
Suretech Development Limited

Sam McDermott

Technical Manager, Hydrogen
Enbridge

Executive Summary

Hydrogen Investments Today to Ensure the Clean Energy Future of Tomorrow

The Hydrogen Business Council envisions a shift towards a "hydrogen economy" that would benefit Ontario and the whole of Canada tremendously. As we face a continuing battle against climate change, the deployment of hydrogen technologies promises major contributions to fulfilling our economy's heavy energy needs while also significantly shrinking the associated carbon footprint and improving conditions for our environment. **A hydrogen economy involves the production of emissions-free hydrogen as the major storage and transmission medium for renewable power, utilizing electric transmission lines as the main energy carrier from zero-carbon power sources.**

Transitioning towards a hydrogen economy, starting soon, will be important for Ontario, since it will allow the energy system altogether to more productively and efficiently use the energy it produces, including that from our intermittent, emissions-free generation sources. With strategically developed infrastructure, hydrogen technologies can store surplus electricity from renewables, reduce the need for curtailment, be used with natural gas to reduce its associated greenhouse gas (GHG) emissions and be used in fuel cells to effectively and cleanly power light and heavy transportation. Several other jurisdictions around the world are seriously planning and building projects as part of their deployment strategies. **Not only is the hydrogen movement-building traction globally, but it is a movement that Ontario and the rest of Canada are uniquely positioned to lead in, if the right strategies are implemented.** From a policy maker's perspective, a transition towards hydrogen ticks various important boxes, including the decarbonization of the economy, job creation, and most importantly the reduction of GHGs.

Hydrogen technologies will also prove advantageous for Ontario in addressing the challenges of the province's energy system. The need to reduce GHG emissions has already been mentioned, but they also remain the problem of health impacts from the air pollution that often accompanies these emissions. Other issues, such as the growing issue of waste and plastic pollution, may also be addressed through technologies such as waste-to-hydrogen. Other concerns this report explores – specific to the context of Ontario – are the challenges of balancing supply and demand in such a diverse and evolving energy system, including the costs of Global Adjustment and the curtailment or export of surplus power.

> **"Hydrogen is the key to solve all these challenges but unlocking its true potential will require both robust national and provincial strategies."**

Hydrogen is the key to solve all these challenges but unlocking its true potential will require robust strategies at both national and provincial levels. These strategies must identify the

sectors that will most benefit, invest in research for innovative and cost-effective technologies, account for regional context, and finally, introduce and enforce policies to encourage the production and use of hydrogen on the provincial scale. It is time for a national dialogue on the role of hydrogen as a contributing pathway to net-zero emissions and as an important driver in a new clean economy for Ontario.

Background on Hydrogen Tech

The advantage of hydrogen depends entirely on the methods used to produce it, which can be grouped into these categories:

> **Brown** and **Grey** hydrogen are strongly advised against, since the associated processes produce hydrogen from fossil fuels, thus releasing carbon emissions into the atmosphere.
>
> **Blue** hydrogen is produced from low to moderate carbon-emitting variations of grey hydrogen production methods, which do not release emissions because their resulting carbon dioxide is instead captured and securely stored.
>
> **Green** hydrogen processes use electricity from clean, renewable energy sources for water splitting, producing hydrogen with zero emissions.
>
> **Purple** hydrogen is another non-emitting category of hydrogen production, specifically using nuclear power.

Moving from the foundational understanding of these categories, color-coded for their carbon intensity, this report then explains various processes for hydrogen generation and utilization to be considered for deployment in Ontario and Canada:

- Power to Gas (P2G) and P2X pathways
- Hydrogen production from fossil fuels
- Electrolysis
- Thermochemical cycles using advanced nuclear power or industrial process heat
- Energy storage
- Fuel cells, including Polymer Electrolyte Membrane Fuel Cells (PEMFC)

Hydrogen Policy Today to Motivate Zero-Emissions Progress Tomorrow

To reach an overarching target for zero emissions by 2050, we prioritize these recommendations for near-term policy actions to set the stage for long-term progress to flourish:

1. Ontario should provide enabling infrastructure and temporary incentives to spur the deployment of hydrogen in Ontario's heavy transportation sector.

2. Price the use of surplus electricity generating capacity for hydrogen production at the marginal cost of generation and transmission.

3. An integrated pan-Canadian hydrogen strategy should further deploy hydrogen as an energy vector for transportation and industry applications and should leverage the country's clean electricity assets.

4. Ontario's hydrogen policies should be coordinated with its electricity policies to maximize the efficiency of decarbonizing the Ontario economy.

5. Ontario's skills and education policies should include programs to train new workers to support Ontario's hydrogen industries.

6. The federal government should create a next-generation energy innovation fund that can be used to fund hydrogen demonstration projects.

7. Government income from carbon pricing policies should be used to invest in hydrogen infrastructure.

8. Provide municipalities and Metrolinx incentives and direction to use hydrogen for rail and long-distance bus urban mass transit.

9. Provide funding for projects to replace diesel generation or power lines for remote communities with local generation using a mixture of renewable (wind, solar, hydro) power with hydrogen storage and generation.

10. Provide support for emergent pre-commercial hydrogen technologies that have great promise to further reduce CO_2 emissions.

11. Establish an "Ontario Hydrogen Strategy Advisory Council".

12. Remove regulatory and market barriers to the deployment of hydrogen.

Recommendations for Priority Actions in 2020-2050

To roll out hydrogen technology in the province, the Hydrogen Business Council recommends promptly channeling efforts into deployment through the following short-, mid-, and long-term strategies:

- Hydrogen Refueling Infrastructure on the 401 and 400 Highway Corridors
- Electrolysis for the Industrial Sector
- Rail Infrastructure and Hydrogen Locomotives
- Hydrogen Infrastructure for Energy Hubs and Microgrids
- Conversion of Class 8 Vehicles
- Power-to-Gas
- Hydrogen Enriched Natural Gas (HENG) for the Industrial Sector
- Hydrogen Conversion to Products
- Seasonal and Underground Storage of Hydrogen

Table of Contents

Table of Figures

List of Tables

Chapter 1 | Introduction

There are two main drivers for the move towards the hydrogen economy: firstly, the desire to reduce emissions of greenhouse gases (GHGs) – which will, in turn, improve health outcomes in urban centers by reducing critical air contaminants – and secondly, the drive to ensure the security of the energy supply. (1) The hydrogen economy involves the production of hydrogen as an energy carrier from clean energy sources, as an alternative fuel for transportation, and as an energy storage medium. The proper implementation of the hydrogen economy must be accompanied by a significant development in the hydrogen infrastructure, which involves investing in processes for hydrogen production, storage, distribution, and utilization. Ultimately, the hydrogen economy can play a significant role in helping achieve the UN Sustainable Development Goals (SDGs). (2)

Hydrogen as a key energy vector

The basis of a hydrogen economy is the widespread use of hydrogen as a key energy vector that **enables the transfer of energy over space or over time so it is available for use, wherever or whenever it is needed.** (3) Its high energy density makes it a good energy vector and an ideal zero-emissions energy source. Hydrogen will be distributed and used for all essential energy needs, such as for transportation fuel, for blending with natural gas, or for energy storage.

As a highly effective energy vector, hydrogen can:

- transform energy generated from a variety of methods (from fossil fuels, or low- or zero-carbon sources).
- be contained and transferred (e.g., by pipeline or tank storage) to enable energy distribution and storage.
- be converted into energy to use where and when needed for various applications, such as mobility, electricity generation, or heat generation.
- be used as an industrial feedstock, such as for hydrogen-enriched natural gas (HENG), or other chemical products. (4)

Hydrogen as a means of reducing CO_2 emissions

Hydrogen gas can be combusted in a gas mixture or used to generate electricity without GHGs. According to a 2008 study by Haseli et al., the world consumes about 85 million barrels of oil and 104 trillion cubic feet of natural gas per day, resulting in the extensive release of fossil fuels. (5) Hydrogen has been recently considered as a substitute fuel that can reduce the dependency of sectors such as transportation or heavy industry on the burning of fossil fuels. **Hydrogen can also help Canada achieve its goal of net-zero carbon emissions by 2050, and improve urban criteria emissions (SO_x, NO_x, VOC, PM 2.5, PM 10).** (6)

Ontario uses natural gas to provide heating and to power the grid during times of high demand, stabilizing the electricity supply. **However, zero-emission electricity is available in surplus during off-peak hours, which would provide would an ideal power source for hydrogen production, ensuring all hydrogen applications are "green" and sustainable.** (7) The transition into the hydrogen economy becomes essential at this stage, especially given the projections showing the importance of large-scale centralized hydrogen projects from 2025 and onwards.

The role of hydrogen in economic development

A transition toward a hydrogen economy would permit Ontario to use the energy it produces much more efficiently and effectively, especially as the market share of variable, renewable energy (VRE) sources increase. **With a well-developed infrastructure, surplus energy produced from renewable sources in Ontario could be stored as hydrogen, rather than curtailed or exported at unfavorable rates.** Energy stored as hydrogen (produced renewably, through electrolysis) could then be utilized by consumers through a variety of channels. Hydrogen gas could be converted to natural gas via the Sabatier reaction (or similar processes), or the hydrogen could be injected directly into the natural gas grid, in limited quantities (less than 5 – 15%, by volume), and can be termed as Power to Gas. (8) Development of such infrastructure would empower Ontario hydrogen producers to engage in arbitrage by producing hydrogen gas when electricity is least expensive, according to Time-of-Use (TOU) rates. (9) **In a hydrogen economy, other key uses of hydrogen would be within fuel-cell-powered vehicles and combined heat and power systems (CHP).** Major opportunities for hydrogen fuel cell implementation exist among heavy-duty trucks, due to their predictable and consistent routes. (10) Public transport vehicles, such as buses and trains, are also potential areas of implementation, and Ontario transit groups such as Metrolinx and Mississauga's MiWay have studied the feasibility of a transition toward hydrogen fuel cells. (7,11)

Realizing the potential of hydrogen to establish a clean energy system is essential. **The implementation of hydrogen in energy-intensive industries could allow it to play a role across Ontario, providing cross-cutting GHG emissions reduction benefits**. Furthermore, innovation and export benefits would arise in southern Ontario, while northern communities would benefit from increased energy security. Alongside these benefits, the demand for hydrogen production and distribution will rise across the province. At the federal level, the development of a Hydrogen Strategy for Canada presents another area where Ontario's decisions and actions will have amplified effects across the country.

Several other countries are in the process of developing roadmaps for the deployment of hydrogen technology, and many have already begun building demonstration-scale projects, either using or producing hydrogen. For example:

- **The UK** Climate Change Act has the country committed to an emissions reduction of 100% from 1990 levels by 2050. (12) The UK Committee on Climate Change has released a series of recommendations for the implementation of hydrogen, placing a focus on the usage of hydrogen as a backup heat source for buildings, and a recommendation to use blue hydrogen as a means of scaling up infrastructure. (13)

- **Germany** has shown itself to be a leader in hydrogen production technology, with 50 Power-to-X projects either in development or in operation, in addition to 500 hydrogen-based uninterruptible

power supply (UPS) units in operation. German clean energy scenarios predict hydrogen energy usage to be between 300 and 600 PJ by 2050 (10% of total energy primary energy demand). (14)

- Conversely, **Japan** is a leader in the deployment of demand-side hydrogen technology, with 250,000 combined heat and power (CHP) units in buildings and 2,400 hydrogen vehicles. Japanese scenarios see hydrogen usage landing between 600 and 1,800 PJ by 2050. (14)

- **Australia** has several hydrogen projects planned or in operation, such as the Jemena Western Sydney Green Gas Project, a planned system to inject electrolytic green hydrogen into the existing natural gas grid. Other Australian projects include the Bulwer Island production facility, which will electrolytically produce 2,400 kg hydrogen/month, and the ATCO Clean Energy Innovation Hub, which uses excess electricity from a 300-kW solar PV array to generate hydrogen. (15)

- South of the border, **California** has shown itself to be a hydrogen leader with its commitment to build 200 refueling stations along its "California Hydrogen Highway." Furthermore, California has also mandated that one-third of the hydrogen in fueling stations must be produced from renewable energy. (16)

Natural Resources Canada issued a 2019 report on potential pathways of hydrogen implementation, recommending the development of demonstrations and the building of infrastructure. The report also encourages the establishment of research goals, the development of codes and standards related to hydrogen deployment, and international information sharing and collaboration. (17)

Also, in December of 2020, NRCan issued its Hydrogen Strategy for Canada, a comprehensive report which details 32 recommendations to ensure hydrogen plays a key role in Canada's clean energy plans. (18) The 32 recommendations are arranged into eight pillars, which may be summarized as follows:

1. **Strategic Partnerships**

   Pursuing partnerships, domestically and abroad, to establish potential areas of deployment and create market opportunities for Canada.

2. **De-Risking Investments**

   Improving the certainty of demand for hydrogen and supporting early demonstration projects.

3. **Innovation**

   Developing concrete research goals and funding research from academia, government labs, and private sector groups.

4. **Codes and Standards**

   Harmonizing codes and standards for hydrogen across jurisdictions and ensuring Canada plays a role in the establishment of international codes and standards.

5. **Enabling Policies and Regulations**

   Ensuring hydrogen plays a role in clean energy plans and is supported by policy at all levels of government.

6. **Awareness**

   Establishing outreach and communication to the public about the benefits and utility of hydrogen, in addition to training the next generation of workers in the growing hydrogen industry.

7. **Regional Blueprints**

   Creating regional blueprints for the adoption of hydrogen across the country, in addition to facilitating collaboration and replication of successful projects across regions.

8. **International Markets**

   Working to establish Canada's role as a leader in hydrogen technology, as well as investing in infrastructure for hydrogen export (e.g., pipelines and liquefaction processes).

With the multitude of hydrogen opportunities available to the province, Ontario can make good on these recommendations and help to establish Canada as a global leader in the field of hydrogen technology.

Chapter 2 | Hydrogen Background

Hydrogen can help move Ontario and the whole of Canada to its goal of net-zero carbon emissions by 2050. It can be used as an alternative fuel that could reduce the volume of fossil fuels burned in several sectors, such as transportation and heavy industry, thus leveraging Ontario's low-carbon power generation. This chapter discusses the significant opportunities for producing clean hydrogen in Ontario.

Hydrogen Production

It is important to note that the climate advantage of hydrogen depends on how it is produced. Before determining the role of hydrogen in decarbonizing Canada's economy, it is important to understand the different categories of hydrogen production.

Production Categories

While all hydrogen burns the same, the different methods of producing it all emit varying amounts of carbon. They are grouped into the following color-coded categories:

Brown Hydrogen is produced mainly from coal. Using water and heat, coal can undergo "gasification" to produce hydrogen, although this process produces GHG emissions. As waste-to-energy incinerators become more common, they increasingly use similar processes to generate brown hydrogen from municipal waste.

Grey Hydrogen releases high amounts of carbon dioxide and makes up around 96% of current hydrogen production. (19) Grey hydrogen is produced using fossil fuels like natural gas. Though natural gas has a lower carbon content than coal, the climate benefit of grey hydrogen is minimal. Despite its use of a valuable resource, grey hydrogen production is the cheapest of the categories. Noé van Hulst of the IEA has noted this fact "Too often, people assume that the price of grey hydrogen will remain at this relatively low level for the foreseeable future". (20)

Blue Hydrogen is a greener class of hydrogen with low to moderate carbon intensity. Like grey hydrogen, it is produced from fossil fuels, but blue hydrogen production includes carbon capture. The captured carbon dioxide can be stored indefinitely or be used in other industrial processes.

Green Hydrogen is produced from renewable resources, e.g., water splitting powered by renewably sourced electricity (wind, solar, hydroelectricity, and purple phototrophic bacteria (PPB)), water thermolysis powered by renewable heat, and biomass/waste gasification. Hydrogen produced from bioenergy-based options could have negative carbon emissions if carbon dioxide from the process is captured and stored. Green hydrogen is the ideal form of hydrogen production for a net zero-emissions economy. The amount of green hydrogen generation is expected to grow by 22 times by 2030, however, the need for new infrastructure means the move to green hydrogen will require significant investment. (21)

Purple Hydrogen is currently used to describe hydrogen generated from water splitting powered by nuclear energy. Hydrogen production via thermochemical cycles is also a promising technology, compatible with the next generation of nuclear reactors. (22) It offers a low carbon intensity, thus providing a great climate benefit. Additionally, Nuclear power will continue to be the cornerstone of baseload power generation in Ontario for many years.

Power-to-Gas (P2G)

Power-to-Gas (P2G) is the process of converting electricity into gaseous hydrogen fuel and then using it in existing natural gas storage and distribution infrastructure, effectively making a hydrogen-enriched natural gas (HENG) stream**. Power-to-gas technology is considered the bridge between the electric utility and natural gas grid to provide a reduced-carbon fuel for heating, combined heat and power applications (CHP), or even transportation.** (23) Another advantage is that Power-to-Gas, as an energy storage concept, could enable increased use of variable renewable energy sources and make efficient use of excess off-peak baseload nuclear power, thus improving life cycle emissions from power generation and transportation sectors. According to a 2016 study by Walker et al. (24), Power-to-Gas can provide an incremental transition towards the GHG emission-free hydrogen economy since it can use the current natural gas infrastructure. (23,24)

Power-to-Gas can lead to several different energy pathways, most of which depend on large-scale electrolysis, allowing for the convergence of electric utilities and natural gas systems. These pathways are termed P2X.

P2X Pathways

There are different energy pathways under the P2G umbrella that can be implemented both gradually and incrementally as part of the hydrogen transition:

1. Power to hydrogen to natural gas end-users in the form of hydrogen-enriched natural gas (HENG) (including micro-CHP route).
2. Power to renewable content for blending into petroleum fuels.

3. Power to power, in which electricity is used for water electrolysis to produce hydrogen for fuel cells at stationary electricity generators.
4. Power-to-gas, specifically for seasonal energy storage for generating electricity.
5. Power to zero-emission transportation.
6. Power to seasonal storage for transportation.
7. Power to micro-grid.
8. Power to renewable natural gas (RNG) into the pipeline (known as "methanation").
9. Power to renewable natural gas (RNG) into seasonal storage.

Efficiencies and summarized comparisons between the different P2G pathways are presented in the Appendix.

Thermochemical Processes to Produce Hydrogen from Fossil Fuels

Some thermochemical processes for hydrogen production use the energy in different fossil fuel feedstocks to release hydrogen from their molecular structures. These particular processes include steam-methane reforming (SMR) and coal gasification, which produce hydrogen as well as carbon dioxide, so they must be used in combination with carbon capture and sequestration (CCS). (25,26)

Steam-methane reforming (SMR) is a particular method of natural gas reforming, for which the technology is already advanced and mature. (27) **Additionally, it builds upon using our existing pipeline infrastructure for cost-effective natural gas delivery, which also makes it an important candidate as a hydrogen production pathway for the near future**. Natural gas contains methane (CH_4), to which the SMR process applies high-temperature steam (H_2O at 700°C - 1000°C) and pressure (3 - 25 bar) while introducing a catalyst, to derive hydrogen. Along with hydrogen, this process also produces carbon monoxide and a small amount of carbon dioxide. (25)

The next step in the process, the gas-water shift reaction, uses a catalyst to react the generated carbon monoxide with steam to produce carbon dioxide and additional hydrogen. For the final step, pressure-swing absorption is used to refine out the pure hydrogen by removing carbon dioxide and other impurities from the gas stream to be captured and stored. The chemical reactions involved in the SMR are shown here (25):

Steam-methane reforming reaction

$$CH_4 + H_2O \rightarrow CO + 3H_2 \qquad \Delta H_r = 206 \text{ kJ/mol}$$

Water-gas shift reaction

$$CO + H_2O \rightarrow CO_2 + H_2 \qquad \Delta H_r = -41 \text{ kJ/mol}$$

The coal gasification process can also be used to produce hydrogen as well as power, liquid fuels, and other chemicals out of coal, which is chemically complex and with a high degree of variability in its composition. The first step of this process reacts coal with oxygen and steam under high temperatures and pressures, resulting in synthesis gas made up primarily of carbon monoxide and hydrogen, as in the following equation (26):

Coal gasification reaction

$$2CH_{0.8} + O_2 + H_2O \rightarrow CO + CO_2 + 3.6H_2 + \text{other species}$$

After that, impurities are removed from the synthesis gas. Then, similar to the SMR process, a water-gas shift reaction is applied to the carbon monoxide in the synthesis gas, resulting in highly concentrated carbon dioxide and hydrogen at the end of the whole process. (26) To achieve a high purity hydrogen gas product, separation processes must be employed. Traditional gas separation methods include cryogenic distillation or pressure swing adsorption, with membrane separation processes seeing increasing usage in recent years due to their "low energy consumption, low cost of use and simplicity in performance." (28) Typical membrane materials for gas separation include "polymeric membranes, metal-organic frameworks (MOFs), nano-porous materials, and zeolite membranes." (28)

Electrolysis and Its Types

There are three key competitors when it comes to industrial use of Electrolysis: Alkaline Electrolysis or Fuel Cell (AEL or AFC), Polymer Electrolyte Membrane (PEM) Electrolysis/Fuel Cell, and Solid Oxide Electrolysis or Fuel Cell (SOEL or SOFC). Each technology has its benefits and drawbacks. Among the three, alkaline is currently the most mature and widespread technology, while solid oxide is still primarily in its development phase, with few commercial systems available.

Alkaline, being the most mature of these technologies, is currently operable at the MW scale. An alkaline system is comprised of electrodes immersed in an aqueous KOH electrolyte, separated by a diaphragm permeable to hydroxide ions. Hydrogen gas is produced at the cathode and oxygen gas is produced at the anode; each product gas is separated from its respective electrolyte stream in its drum downstream of the electrolyser. Alkaline electrolysis, illustrated in Figure 1, is capable of producing hydrogen gas at purities of 99.5-99.9%. (29)

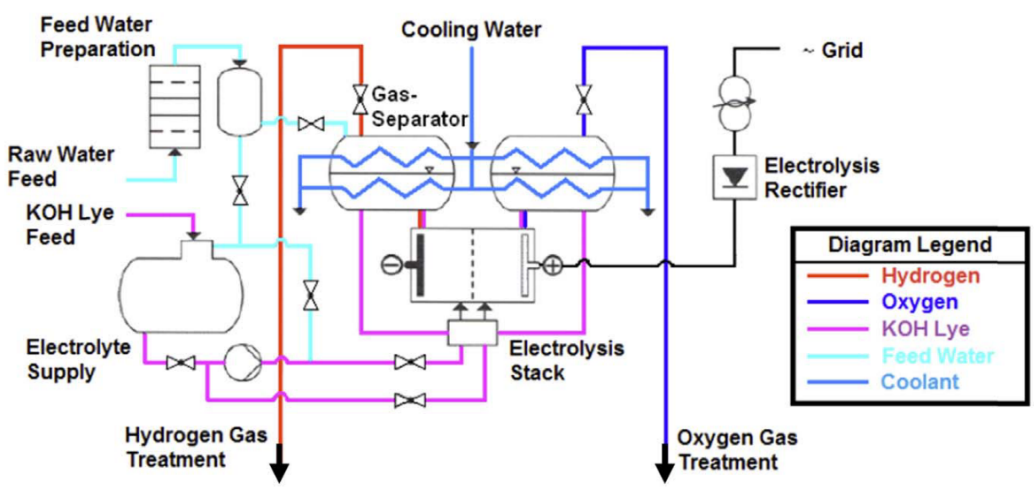

Figure 1: Diagram of the alkaline electrolysis process. (29)

PEM technology has seen rapid development in recent years due to its applicability as a means of flexible energy storage. PEM systems are comprised of electrodes (typically with noble metals such as iridium at the anode and platinum at the cathode) mounted on a solid polymer electrolyte, permeable to protons. (29) Water is supplied to the anode, which is split into oxygen gas and hydrogen ions. The ions then permeate across the membrane to the cathode, where they react to form the hydrogen gas product. PEM can produce pure hydrogen in the range of 99.99% after the unreacted water is condensed. Furthermore, PEM systems are more compact and can operate at higher current densities and pressures than alkaline. (29) Another advantage of PEM is its slightly superior flexibility in operation, though both technologies possess sufficient flexibility for grid balancing services. (29) PEM systems can operate in a range of 0-100% of their nominal load, in comparison to alkaline, which can operate between 20-100%. PEM systems also demonstrate faster start-up times than alkaline. (29) A diagram of a PEM electrolysis system is shown in Figure 2.

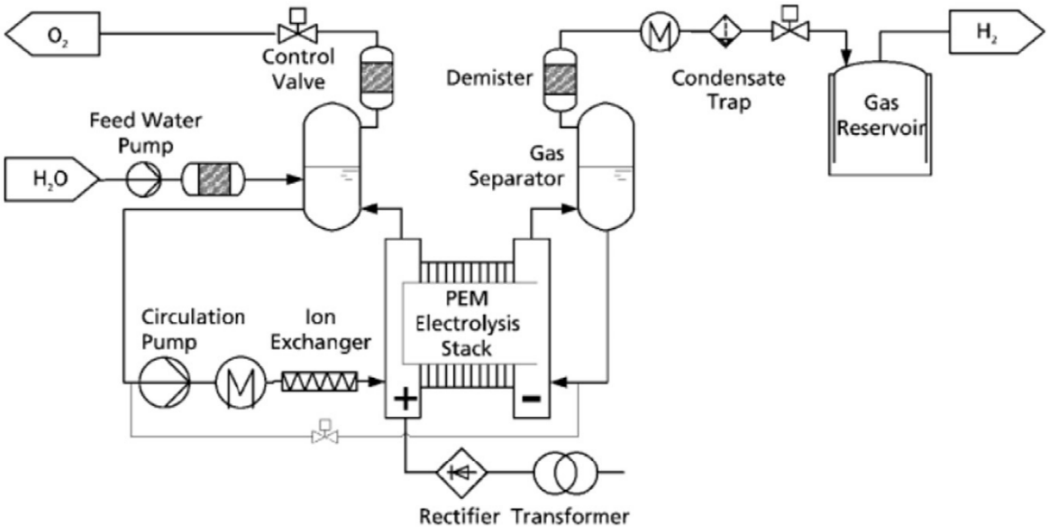

Figure 2: Diagram of PEM electrolysis process. (29)

Lastly, solid oxide (SO) electrolysis is developing technology with a key advantage over the other methods: a higher operating temperature (700-900°C). (29) The technology benefits from improved reaction kinetics and thus does not require precious catalyst material, presenting an economic advantage. (29,30) This higher temperature also enables higher efficiency than other methods but causes issues related to material degradation. (29) Common degradation issues include surface segregation on the cathode (made of strontium-doped lanthanum cobalt ferrite, or LSCF) (31) and nickel agglomeration on the anode (made of nickel/yttria-stabilized zirconia, or YSZ). (32) In an SO system, steam and recycled hydrogen are fed to the cathode, where additional hydrogen is then generated. Solid oxide systems are typically composed of several planar cells connected in series. If the systems are operated at a high enough voltage, the Joule heating from the internal resistance of electrolysis cells can be used to meet the heat demand of electrolysis. (33) This is known as the thermoneutral operation, which is often not used due to material degradation issues. (29) Thus, to maintain the high operating temperature, external heating is often required to bring the feed up to temperature. This opens opportunities for integration within other heat-emitting processes. Opportunities also exist within solid oxide technology for co-electrolysis of water and CO_2 to produce H_2 and CO, which may be used in tandem to produce synthetic fuels. Solid oxide technology also has the potential for reversible operation (i.e. usage as both fuel cell

and electrolyser). (29) Figure 3 details a solid oxide electrolysis process, while Table 1 summarizes the performance metrics of the different electrolysis methods.

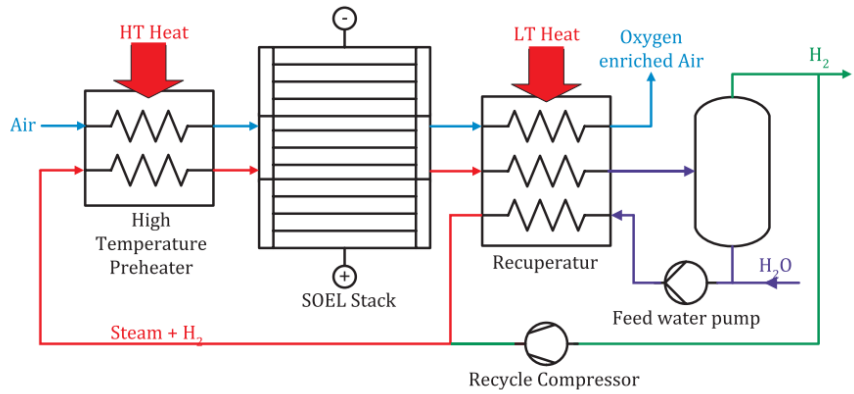

Figure 3: Diagram of the solid oxide electrolysis process. (29)

Table 1: Comparison of electrolytic hydrogen production methods. (29)

Parameter	Alkaline	PEM	Solid Oxide
Operating temperature (°C)	60-90	50-80	700-900
Operating pressure (bar)	10-30	20-50	1-15
Load flexibility (% of nominal load)	20-100	0-100	-100/+100
Cold start-up time	1-2 h	5-10 min	hours
Warm start-up time	1-5 min	< 10 s	15 min
Stack efficiency (LHV)	63%-71%	60%-68%	100%[a]
Stack specific energy consumption (kWh/Nm^3)	4.2-4.8	4.4-5.0	3
Nominal system efficiency (LHV)	51%-60%	46%-60%	76%-81%
System specific energy consumption (kWh/Nm^3)	5.0-5.9	5.0-6.5	3.7-3.9
Investment costs ($/kW)	1230-2306	2153-3229	> 3075[b]
Purity of hydrogen	99.5-99.9	> 99.99	-

[a] Assuming thermoneutral operation

[b] Pre-commercial estimate

Thermochemical Cycles for Hydrogen Production

Thermochemical cycles present several promising hydrogen production methods that may become relevant in the future. One example is the thermochemical copper-chlorine (Cu-Cl) cycle, a complementary technology to the Generation IV Supercritical Water Reactor, the next generation of nuclear reactor set to be implemented between 2030 and 2050. (34) The Cu-Cl cycle would use heat from the reactor to achieve a net predicted efficiency of 43%, an improvement over the 30% that would be achieved by an electrolyser powered by the same reactor, which is assumed to have an efficiency of 42%. (22) The cycle could also potentially utilize heat from solar processes or industrial waste heat from steel or cement processes. (35) Taking advantage of these various heat sources would improve the economic viability of this method. Table 2 compares the hydrogen production methods discussed thus far.

Table 2: Comparison of various hydrogen production methods. (29,36,37)

Parameter	SMR	Coal Gasification	Electrolysis	Cu-Cl cycle
Efficiency	74%-85%	60%-75%	46%-81%	45%
Hydrogen cost ($/kg)	2.27 *(with CCS)* 2.08 *(no CCS)* *2005 dollars*	1.63 *(with CCS)* 1.34 *(no CCS)* *2005 dollars*	5.78-23.27 *(solar PV, 2007 dollars)* 5.10-10.49 *(solar thermal, 2007 dollars)* 5.89-6.03 *(wind, 2005 dollars)* 2.17-2.63 *(nuclear, 2007 dollars)*	2.17 *2007 dollars*
Lifecycle CO_2e/H_2 (kg/kg)	11.893	11.299	0.970 *(wind)* 2.412 *(solar)*	12.300[a]

[a] High CO_2e emissions are mainly attributable to the carbon emissions from uranium processing.

Hydrogen Storage

Hydrogen gas is an effective energy storage medium. One of its advantages is the ability to store it in large amounts for extended periods before deployment or usage as:

- compressed gas in high-pressure tanks.
- a liquid in tanks (stored at -253°C & 1 atm).
- underground Hydrogen storage (UHS)
- a solid by either absorbing or reacting with metal hybrids or chemical compounds or storing in an alternative chemical form.

Underground hydrogen storage showed high level of feasibility in southern Ontario with several portrait storage options Silurian bedded salts, depleted Ordovician natural gas reservoirs, saline aquifers in

Cambrian sandstone, and hard rock caverns in argillaceous limestones (38). Other examples of energy storage for hydrogen include salt caverns, and depleted oil and gas wells. (23) Salt caverns are considered the primary option for UHS, owing to their low permeability to gases. There are 71 salt caverns suitable for natural gas storage are reported in the Sarnia and Windsor areas of southwestern Ontario, with a total capacity of approximately 85 million cubic meters. (39)

Several considerations accompany hydrogen storage: operating pressure and temperature over the lifespan of the storage material (stability), hydrogen purity requirements imposed by fuel cells, the reversibility of hydrogen uptake and release, refueling rate and time, hydrogen delivery pressure, overall safety, toxicity, system efficiency, and cost. To overcome the storage issues, a breakthrough in materials performance and system design must occur, which can be brought about with innovative research looking beyond the materials considered so far.

Table 3 compares existing hydrogen storage technologies to the goals set by the US Department of Energy in terms of weight, volume, and costs. The DOE 2020 goals are based on collaboration between the Metal Hydride Center of Excellence, the Hydrogen Sorption Center of Excellence, and the Chemical Hydrogen Storage Center of Excellence, in addition to several independent projects that investigated more than 400 materials for potential use in hydrogen storage applications. However, there is still a noticeable gap between the current technologies' performance levels and the targeted performance levels.

Table 3: Comparison of hydrogen storage technologies. (40,41)

Storage technologies	Weight (kWh/kg)	Volume (kWh/L)	Cost ($/kWh)
Chemical Hydrides	1.4	1.4	$8.00
Complex Metal Hydrides	0.8	0.6	$16.00
Liquid Hydrogen	2.0	1.6	$6.00
Gas (10,000-psi)	1.9	1.3	$16.00
DOE 2020 Goals	1.5 kWh/kg system (4.5 wt.% hydrogen)	1.0 kwh/L system (0.030 kg hydrogen/L)	$10/kWh ($333/kg stored hydrogen capacity)

Fuel Cells

In a fuel cell, electricity is produced directly from the energy stored in the fuel but without conventional moving parts or combustion. In a general case, hydrogen is used to power most of the fuel cells. It can be directly fed to the fuel cell system or can be generated within the fuel cell system by reforming hydrogen-rich fuels such as methanol, ethanol, and hydrocarbon fuels.

When it comes to consumption, hydrogen fuel cells are strong competitors in the heavy vehicles market compared to battery-only options with their weight and range constraints. Fuel cells can also provide a sustainable option for CHP applications or stationary electrical power generation, especially in applications requiring 250 kW or less. (42)

According to the Canadian Hydrogen and Fuel Cell Association, fuel cell types share similar configurations, consisting of an electrolyte and two electrodes. However, fuel cell types differ based mainly on what electrolyte they use. There are several types of fuel cells, including (43):

1. **Polymer membrane fuel cells (PEM),** also called proton exchange membrane fuel cells, deliver high power density, and offer the advantages of low weight and volume compared with other fuel cells.
2. **Direct methanol fuel cells (DMFCs)** are powered by pure methanol, which is usually mixed with water and fed directly to the fuel cell anode.
3. **Molten carbonate fuel cells (MCFCs)** are currently being developed for natural gas and coal-based power plants for electrical utility, industrial, and military applications.
4. **Phosphoric acid fuel cells (PAFCs)** use liquid phosphoric acid as an electrolyte. They are usually 85% efficient when used for the co-generation of electricity and heat, but they are less efficient at generating electricity alone (37%–42%).
5. **Solid oxide fuel cells (SOFCs)** use a hard, non-porous ceramic compound as the electrolyte. SOFCs are around 60% efficient at converting hydrogen fuel to electricity.
6. **Alkaline fuel cells (AFCs)** were one of the first fuel cell technologies developed. The high performance of AFCs is due to the rate at which electrochemical reactions take place in the cell. They have also demonstrated efficiencies above 60% in space applications.

Polymer Electrolyte Membrane Fuel Cell (PEMFC)

The Polymer Electrolyte Membrane Fuel Cell (PEMFC) works similarly to the PEM electrolysis described previously, but the reactions are reversed: instead of supplying electricity to generate hydrogen, hydrogen is supplied to the PEMFC to generate electricity. Figure 4 illustrates a basic schematic of a PEMFC. These fuel cells boast a high-power density and a low operating temperature of 80-120°C but suffer from an expensive material cost for the platinum catalyst and severe sensitivity to CO contaminants in the H_2 inlet stream. (30)

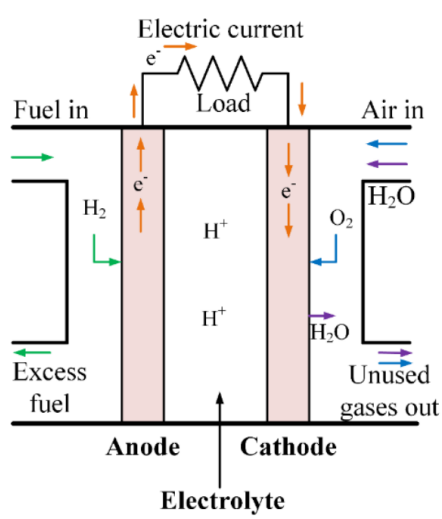

Figure 4: Schematic of a PEM fuel cell. (30)

Figure 5 provides a more detailed diagram of the PEMFC, highlighting the individual components within each cell. The outermost layers on either side of a cell are electrically conductive bipolar plates, which are in contact with the positive electrode of one cell and the negative electrode of the adjacent cell. Channels run through either side of the bipolar plate, carrying in either hydrogen or oxygen reactant gas, and carrying out the water vapor by-product from the oxygen electrode. These plates are typically about 1.5 mm thick, with 0.5 mm deep channels. (44)

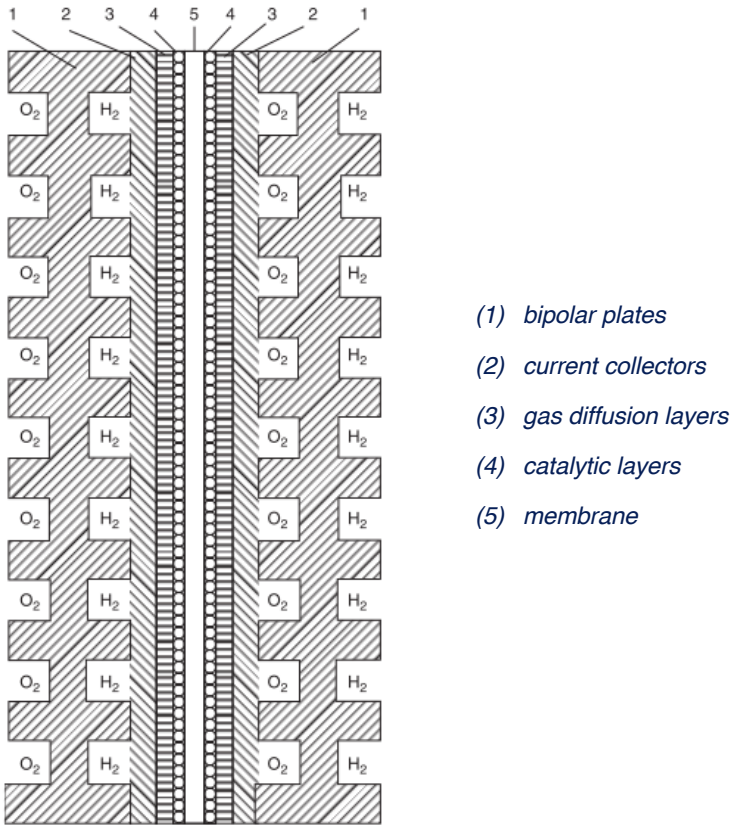

Figure 5: Diagram of PEM fuel cell components. (30)

Between the bipolar plates lie the membrane electrode assembly (MEA). The electrodes in a PEMFC are composed of a gas diffusion layer and a catalytically active layer. The diffusion layer is primarily made up of carbon black and poly-tetra-fluoro-ethylene (PTFE). This porous layer evenly disperses reactant gas to the active layer, which is a boundary between the gas, the catalyst, and the membrane. The platinum-ruthenium catalyst is supported either by carbon cloth, carbon paper, or simply the membrane. A typical MEA is about 0.5 – 0.6 mm thick, making the overall design of the PEMFC extremely compact. (44)

In the center of the MEA lies the polymer membrane, which is often made of Nafion™. This material is composed of perfluorinated sulfonic acid polymer (PSAP): a chain of $(CF_2)n$ groups, attached to which are SO_3H groups that dissociate when sufficiently moistened and provide excellent ionic conductivity for H^+ ions. As such, the membrane must remain wet, meaning the inlet gases must be saturated with water before entering the cell. Operating pressures of PEMFCs typically range between 2 – 5 bar, a pressure necessary to saturate the inlet gases with water while still maintaining a suitable partial pressure for the reactant gases. Nafion™ membranes generally must operate at temperatures between 80 – 90°C to

ensure the dissociation of the SO_3H groups. A key drawback of the material is its cost: a Nafion™ membrane can cost roughly 700 USD per m^2. (44) In most applications, multiple cells are assembled into a stack, as shown in Figure 6.

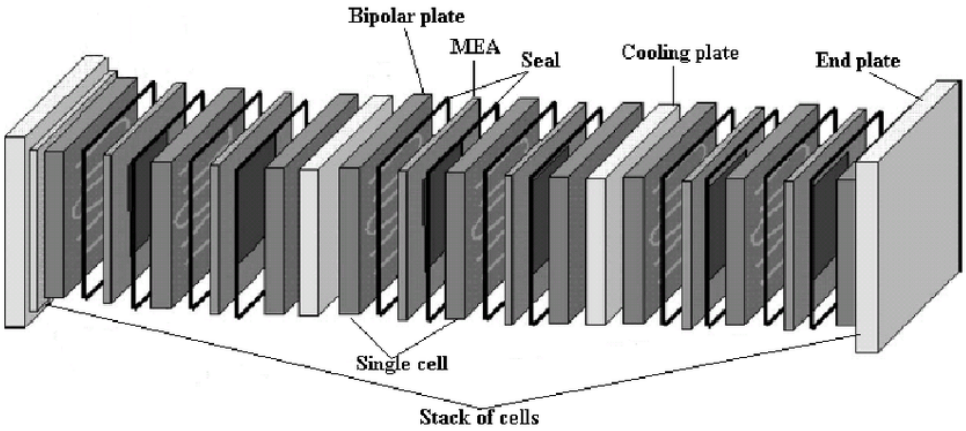

Figure 6: Diagram of the fuel cell stack. (45)

Chapter 3 | Power & Emission issues in Ontario

In 2017, Ontario's total energy demand was 3,012 petajoules [8.37×10^8 MWh] (Figure 7). According to a 2020 report by Ontario's Green Ribbon Panel, 47.7 kWh of electricity is required to produce 1 kg of hydrogen. (46) Also, the costs of electricity generation facilities in Ontario have increased by 74% in the last decade, from $6.7 billion in 2004 to $11.8 billion in 2014, and may grow to $13.8 billion by 2022. (47)

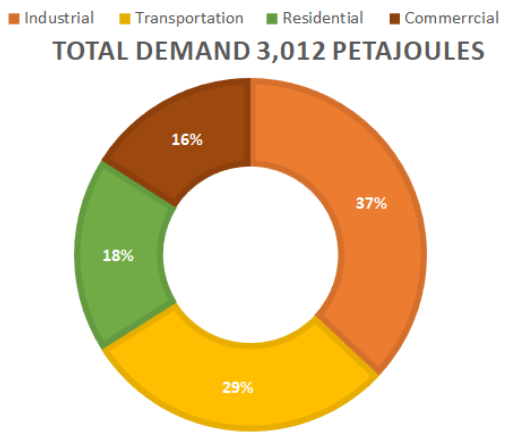

Figure 7: Ontario energy demand breakdown. (48)

One more source of electricity demand arises as a result of Ontario's climate objective, which aims to reduce emissions by 30 percent below 2005 levels through electrification. According to (49) 1.66 TWh of electricity is needed to remove 1 Mt of CO_2. To fully electrify Ontario's economy, an additional 280 TWh of electricity is required, almost tripling the demand on Ontario's grid. This is 25 percent more electricity than Ontario uses today, equivalent to almost 90 percent of the output from Bruce Power's eight nuclear reactor sites.

For the above reasons, **the implementation of a smart grid and energy storage in Ontario is urgently needed, which will enable further penetration of wind and solar (as this continues to be a policy objective) and support those assets already in place.** Instead of distributing electricity out of the province at a loss, methods such as Power-to-X (P2X) can be used to facilitate the storage of energy or its use in other applications within Ontario.

Several renewable technologies, such as photovoltaic and wind turbines, are used in Ontario to supply power at peak demand and narrow the demand gap. However, the unit price of electricity production of these generators has become a limitation as they stand at much higher costs than natural gas or nuclear-based power plants. According to a 2017 study by Maroufmashat and Fowler, the high cost of wind and solar is due to long-term contracts that were issued in Ontario as part of the Green Energy Act in 2008. They stand around 50 and 13 cents per kWh, respectively, while those of nuclear and gas is around 5 and 11 cents per kWh, respectively. (23, 47)

Curtailment and Export

When there is an excess of power generation during periods of low demand, power generation can be curtailed, meaning generation is reduced from its nominal production capacity. Curtailment can also occur when there is congestion in the transmission network. (50) **Variable renewable power, i.e., wind and solar power, is a frequent target of curtailment**. Typically, to curtail wind power, wind turbine output is lowered by reducing the aerodynamic efficiency of the turbine. In Ontario in 2019, 18% of wind and solar power generation was curtailed to manage surplus baseload generation (SBG), totaling 2,581 GWh. (51) Nuclear power also suffers from curtailment – nuclear generation in Ontario is subject to "nuclear maneuvers", of which there were 292 in 2019. These totaled 604 GWh or 0.7% of total nuclear generation. (52) **Almost 40% of the surplus electricity is curtailed or wasted because it cannot be exported. In 2015, 4.8 TWh of electricity, enough to power 480,000 homes for a year, was curtailed**. (53)

Energy is also frequently exported out of Ontario. In 2019, 19,779 GWh of electricity was exported, while 6,613 GWh was imported. (52) Exports can increase revenue for electricity providers, but exports can also occur at unfavorable rates. Exports and curtailment contribute to the Global Adjustment rate, which increases the amount paid by consumers in Ontario.

Global Adjustment

Global adjustment includes cost conservation programs and funds the building of new electricity infrastructure to ensure the electricity supply is available over extended periods. The components making up the global adjustment are shown in Figure 8.

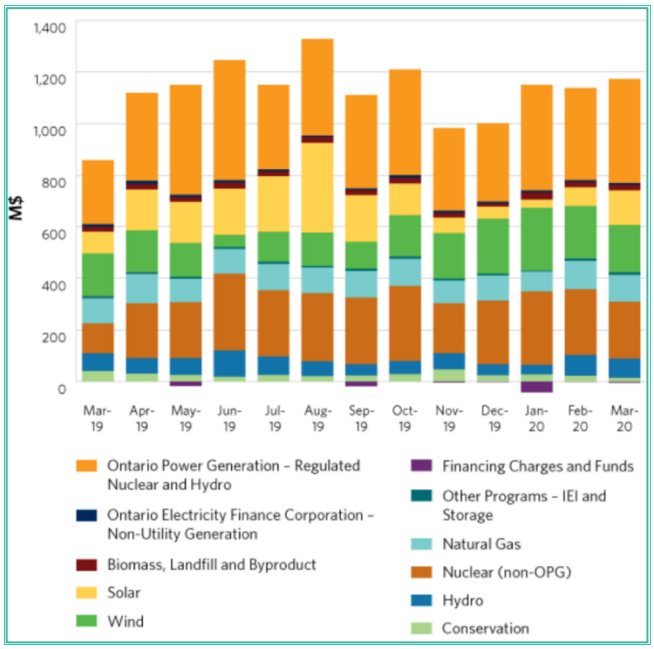

Figure 8: Monthly global adjustment costs, broken down by component. (25)

Several factors lead to the growth in surplus power, including the rising number of power suppliers and falling market prices. (54) Increasing export is inevitable because power suppliers have maintained the level of their production even at the low electricity price and declined demand. (54) Customers of Ontario electricity must pay more via global adjustment to cover up the cost of cheap export. **To put this in perspective, in Ontario, electricity customers have paid 6.3 billion dollars since 2005** to compensate for the cost of selling surplus power to the United States and other provinces. Between the years 2009 and 2014, Ontario on its own exported around 5.1 million megawatt-hours of power, which cost around $3.1 billion more to produce than the revenue received for it. This adds the global adjustment fee to the electricity price, making it a higher price than what it is exported for. (55) The global adjustment fee can be as high as 5 times the average electricity production cost. For example, the average global adjustment fee for 2016 was 10 cents per kWh, while the average electricity production cost was 2 cents per kWh. (23)

To put it into perspective,

- Generation costs in Ontario have increased by 74% in the last decade, from $6.7 billion in 2004 to $11.8 billion in 2014, and may grow to $13.8 billion by 2022.
- Global adjustment (GA) fees have increased from $650 million in 2006 to $7.03 billion in 2014.
- From 2006 to 2014, consumers had already paid $37 billion in GA fees and are expected to pay $133 billion in GA fees between 2015 and 2032. (47)

The global adjustment fee paid by consumers is derived based on two factors. The first factor is due to the difference in price between the price that the IESO has promised to pay producers of electricity, known as the contracted rate, and the fair market value of this electricity, known as the Hourly Ontario Energy Price. The second factor is related to curtailed energy being paid for by citizens in the form of the global adjustment rate. **Global adjustment now represents 90% of the earned revenue from exported power and it has been growing rapidly over recent years (around 20% per year increase).** (55)

Implementing hydrogen technology would decrease the global adjustment rate on Ontarians' energy bills, reduce greenhouse gas emissions, and support job creation and economic growth. Ontario already has a well-established natural gas distribution infrastructure that facilitates the early stages of hydrogen production and provides an ideal mechanism for the transportation of hydrogen. Hydrogen produced from surplus renewable energy can be injected into natural gas pipelines to decarbonize natural gas via direct blending to make hydrogen-enriched natural gas (HENG), which will be discussed further in Chapter 5.

Air-borne Emissions in Different Sectors

In Canada, several economic plans can be implemented to face the harsh reality of climate change. (46) Hydrogen from low and zero-carbon resources can mitigate climate change. **In Canada, according to a government report in 2017, there were recorded CO_2 emissions of 5,662 kt, a decrease of 54% over the last decade due to the several restrictions that were implemented in the transportation sector.** (56) **Transportation (road, rail, air, and marine) was the largest source of emissions in Canada. In 2017, the sector represented 32% (1,819 kt) of total emissions.** (57)

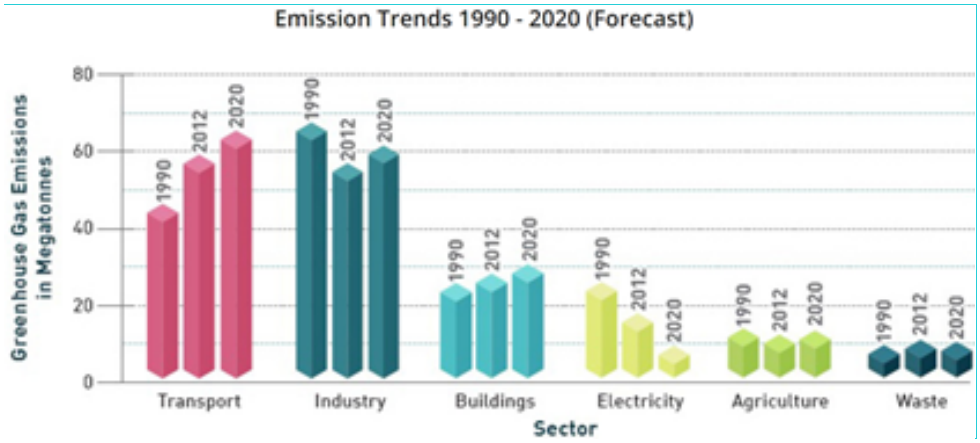

Figure 9: Emission trends based on sector, 1990 to 2017. (58)

Figure 10, obtained from Environment and Climate Change Canada, details the change in air pollutants percentage from 1990 to 2018. The emissions data that are extracted from Canada's national inventories are used to produce the indicators for the 6 key compounds shown below. It is also important to point out that the data below is based on human activities only and not the emissions that may come from natural sources such as forest fires, etc.

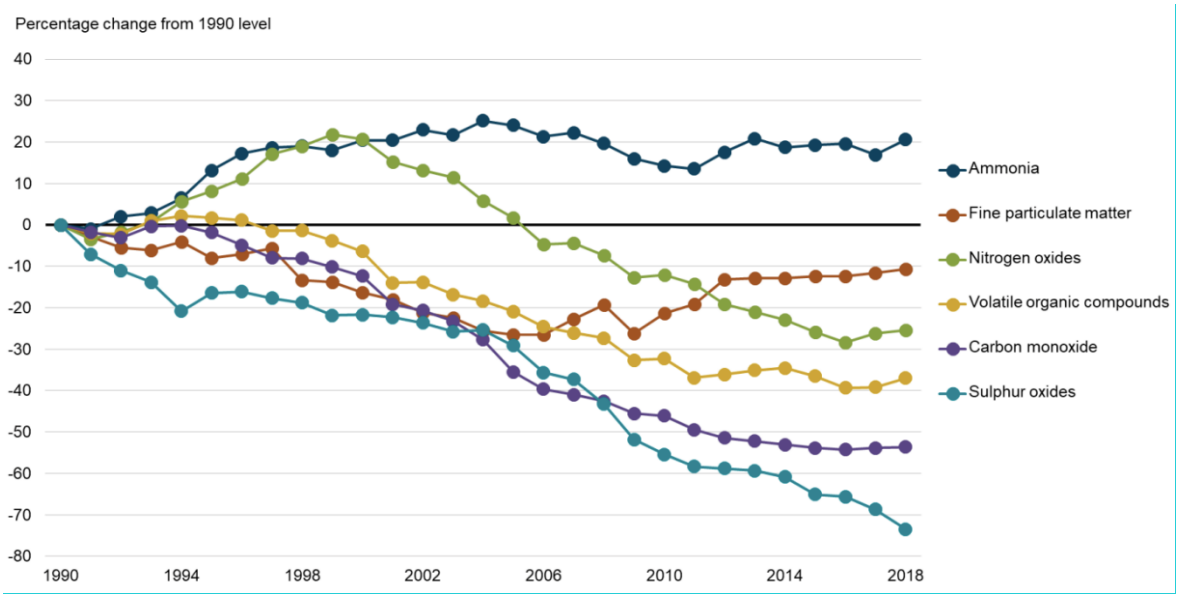

Figure 10: Air pollutant emissions in Canada, 1990 to 2018. (57)

Black carbon is generated by the incomplete combustion of fossil fuels and biomass. According to a report from Environment and Climate Change Canada, it is linked with both climate warming and adverse human health effects. Black carbon is estimated to be the third-largest contributor in the world to current global warming. (57) It is important to point out that carbon monoxide is not labeled as a direct greenhouse gas as it does not absorb terrestrial thermal IR energy strongly enough. However, CO is still able to modulate the production of methane and tropospheric ozone, hence its inclusion in the above figure.

Direct Health Impacts

The US Environmental Protection Agency reported in 2008 that highway vehicle emissions have a direct impact on air quality and, more importantly, on human health. (59) These emissions include pollutants such as NO_x and VOCs which react with each other to form ground-level ozone, a major part of smog. (60) **According to the Canadian government, in 2018, NO_x emissions were 1,768 kt. This is 25% lower than in 1990. Transportation is a major source of NO_x, representing 41% (723 kt) of total emissions in 2018. The next greatest source of NO_x emissions was the oil and gas sector, with the remaining NO_x emissions having come from off-road vehicles and mobile equipment, electric utilities, and other uncategorized sources.** (57)

Several scientific studies point out that aggravation of respiratory cardiovascular diseases, pneumonia, and premature signs of cancer are all health problems that can be caused by the air pollutants mentioned above. **In Ontario, over 1700 deaths a year are attributed to poor urban air quality.** (61) A recent study conducted by the Toronto Medical Officer of Health found that in Toronto alone, 280 premature deaths and 1,090 hospitalizations each year are due to transportation pollution. (61) **One of the most recognized health concerns is the negative impact of Diesel Exhaust Particulates, or Diesel Particulate Matter (DPM).** Ideal combustion of diesel should only result in the emission of CO_2 and water vapor; however, the incomplete combustion of diesel fuel usually takes place, resulting in the emission of various gases, liquids, and solid particulates instead. This DPM includes diesel soot and aerosols such as ash particulates, metallic abrasion particles, sulfates, and silicates. Various studies have confirmed both the short term and long-term health impacts of DPM. According to a study by Sydbom et al., exposure to DPM directly can result in developing short-term symptoms such as nausea, coughing, and labored breathing. In the long term, health effects such as respiratory tract infections, chronic bronchitis, ischemic heart disease, and stroke may occur. (62) **Urbanization is a major factor of the increased concerns over these health effects,** especially in regions such as Southern Ontario, which is the most densely populated region in the country, and home to the five fastest-growing urban areas in Canada, according to a 2020 report from Statistics Canada. (63)

Chapter 4 | Ontario's Transition to a Hydrogen Economy

The Hydrogen Business Council proposes an overarching target of zero-emissions by 2050 for the province of Ontario. The Council prioritizes the following recommendations for near-term action, which is required for building the long-term progress necessary to reach the 2050 zero-emissions target. In addition to inputs from several industrial partners, these recommendations are adapted from the Green Ribbon Panel's 2020 report, which the council supports. (46) In addition to contributions from the listed academic and industrial contributors.

1. **Ontario should provide enabling infrastructure and temporary incentives to spur the deployment of hydrogen in Ontario's heavy transportation sector.**
   Heavy transport travels long distances in Ontario and hydrogen is the only practical fuelling technology that can greatly reduce or eliminate emissions for trucks and ships that must travel moderately to long distances. Also, while conventional electrification can be utilized for rail transport, the required overhead wires are very expensive for the long distances and the relatively low utilization factors (revenue per mile) of Ontario railways. Hydrogen will be a more economical technology for rail decarbonization in Ontario.

2. **Price the use of surplus electricity generating capacity for hydrogen production at the marginal cost of generation and transmission.**
   While this price structure will be lower than for other loads such as large industrial users, hydrogen is not a load, but rather a component in the energy delivery system – an energy carrier, just like the wires for Hydro One's distribution system. As such, this policy increases the efficiency of energy delivery, benefiting existing grid-connected loads through storing and feeding power back during peak demand, and benefiting non-grid-connected loads such as remote communities and transportation that would use the hydrogen locally to produce power.

3. **An integrated pan-Canadian hydrogen strategy should further deploy hydrogen as an energy vector for transportation and industry applications and should leverage the country's clean electricity assets.**
   Transit is uniquely positioned to drive consumption of hydrogen at scale, to support the economies of fuel production, drive large-scale GHG reduction, and subsequent adoption of the technology. There are currently no hydrogen fuel cell electric buses in operation in Canada, although the buses and the fuel cell technology are developed in Canada, by Canadian companies. Additionally, Ontario is uniquely positioned with a cluster of medium and large-scale transit agencies, which would support the establishment of an economic and energy-efficient fuel distribution network. The province can also leverage its status as a hub for automotive manufacturing to establish itself as a key manufacturer of hydrogen fuel cell electric vehicles and the center of a "Hydrogen Innovation Supercluster". Ontario could be the Canadian leader in adopting this commercially proven technology that will facilitate the growth of the hydrogen economy. Developing a strategy from the federal level should offer support funding for shovel ready projects, in transit, to demonstrate the feasibility of the technology for Ontarians and establish Ontario as the leaders in Canada in this innovative technology.

4. **Ontario's hydrogen policies should be coordinated with its electricity policies to maximize the efficiency of decarbonizing the Ontario economy.**
   Electricity and hydrogen are both energy carriers. The efficiency and productivity of Ontario's economy will be maximized by using each of these carriers where they provide their respective greatest impact in terms of low cost, reliability, and customer convenience. Electrification of transportation as an early mechanism to reduce CO_2 emissions means that both the utilization of electricity in batteries and the electrolytic production of hydrogen have key roles to play.

5. **Ontario's skills and education policies should include programs to train new workers to support Ontario's hydrogen industries.**
   Hydrogen industries can be a significant contributor to Ontario's future economy and the availability of skilled workers is essential to support the future growth of these industries. Thousands of well-paying jobs can be created here in Ontario if this emergent hydrogen industry is developed and supported as it should be in this decade.

6. **The federal government should create a next-generation energy innovation fund that can be used to fund hydrogen demonstration projects.**
   The federal government should take the lead in funding the demonstrations of new CO_2 reduction technologies that have applications across multiple provinces. This is consistent with the Federal government's role in CO_2 emission reduction policy and can avoid duplications of efforts in multiple provinces. The government can facilitate access to capital and de-risk investments through the funding of these projects and accelerated government procurement.

7. **Government income from carbon pricing policies should be used to invest in hydrogen infrastructure.**
   This will create positive feedback that will reduce CO_2 emissions faster and accelerate the growth of Ontario hydrogen industries. Consider adding a policy on urban mass transit.

8. **Provide municipalities and Metrolinx incentives and direction to use hydrogen for rail and long-distance bus urban mass transit.**
   Mass transit is amenable to early hydrogen adoption because of its potential use of centralized refueling, which will limit start-up costs, and it resides in provincial jurisdiction where action can be implemented directly.

9. **Provide funding for projects to replace diesel generation or power lines for remote communities with local generation using a mixture of renewable (wind, solar, hydro) power with hydrogen storage and generation.**
   Remote mines and First Nation communities will need non-carbon emitting power sources in the future. The future prosperity of these industries and communities needs to demonstrate reliable non-CO_2 emitting power supply technologies.

10. **Provide support for emergent pre-commercial hydrogen technologies that have great promise to further reduce CO_2 emissions.**
    Most, if not all the previous recommendations would make use of already commercial (or very close to commercial) hydrogen technologies. However, there may be emergent hydrogen technologies that have the potential to complement or even surpass the CO_2 reductions that would ensue from our suggested actions. These would include (but are not limited to):
    1) production of "clean" or "green" ammonia and fertilizer for industry and agriculture

2) generation of hydrogen from various biological sources or waste streams
3) materials development to increase the potential proportion of hydrogen content in natural gas
4) bulk hydrogen storage in geological media for a multiplicity of end uses
5) hydrogen production using high-temperature thermochemical processes
6) use of hydrogen as a fuel and buoyant gas for use in advanced autonomous airships that would deliver freight to remote northern communities with no road access.

All these technologies are already under development in Ontario and Canada.

11. Establish an "Ontario Hydrogen Strategy Advisory Council".

Such a group would work with the provincial government to guide the implementation of hydrogen technologies. The council would consist of key hydrogen experts, producers, end-users (individual and industrial), and project developers, as well as key representatives from the environmental community and citizen groups, including indigenous groups (e.g., through Chiefs of Ontario).

12. Remove regulatory and market barriers to the deployment of hydrogen.

Under the direction of the Ministry of Energy, the IESO and OEB should investigate which regulatory and market barriers presently exist that restrict investments in and deployment of hydrogen as a clean fuel. The province should then work to remove such barriers promptly, and thereby kick start a vibrant hydrogen economy in Ontario that will become self-sustaining within 5 years.

Chapter 5 | Priority Actions

To roll out hydrogen technology in the province, the Hydrogen Business Council recommends promptly channeling efforts into deployment through the following short-, mid-, and long-term strategies. Further detailed explanations of each of the following are also included in the Appendices.

A – Hydrogen Refueling Infrastructure on the 401 and 400 Highway Corridors

(Short-Term Action)

An excellent opportunity to implement hydrogen technology currently exists along Ontario's Highway 401, a portion of the North American Superhighway Corridor (NASCO). The highway sees a large amount of heavy-duty truck traffic every day, meaning a partial conversion of the current diesel fleet to hydrogen fuel cell vehicles would yield significant environmental and health benefits. Trucks are a good target for fuel cell technology, thanks to the long-range granted by hydrogen's high energy density and the quick refueling potential. (10) Due to the consistent, predictable routes taken by these vehicles, **they are also ideal targets for the transition into FCEVs because the fleet could function with only a small number of intelligently placed refueling stations**.

A study by Shamsi et al. proposes a cost-optimized layout of refueling stations and electrolytic production sites along the 401 for different levels of hydrogen market penetration (i.e. the percentage of Class 7-10 diesel trucks using hydrogen fuel cells). Existing ONroute rest stops are proposed as refueling/production sites, which would take advantage of existing infrastructure. There is presently a "chicken and egg" dilemma regarding the development of hydrogen refueling infrastructure: refueling infrastructure must be in place for widespread adoption of FCEVs to take place, but there is a reluctance to invest in refueling infrastructure without a large-scale adoption of FCEVs to fuel. (64)

A small-scale, initial investment into the infrastructure, exemplified by Scenario 1 (Figure 11) which assumes a 0.1% market penetration of FCEVs, would resolve this issue and prompt further investment into the technology. Scenario 1 assumes one hydrogen production plant (1000 kg H_2 / day), alongside six refueling stations. (10) A situation with a 1% FCEV market share, as discussed in the study, would involve a greater number of fueling stations and would be a longer-term goal after the technology is effectively demonstrated as a success. Though not discussed in the study, another long-term objective would involve the expansion of hydrogen fueling stations along the 400-highway corridor, permitting FCEV to travel toward northern communities and the Trans-Canada Highway.

With sufficient refueling infrastructure, light FCEVs may also become an attractive option for enthusiastic early adopters. Transit vehicles could also transition toward FCEVs with sufficient infrastructure, as CUTRIC seeks to demonstrate with its Pan-Canadian Hydrogen Fuel Cell Electric Bus Demonstration and Integration Trial. The trial involves the launch and analysis of 30 fuel cell-powered buses. (65)

Increased adoption of FCEVs would yield a variety of benefits. In Ontario, the transportation sector is responsible for 35% of emissions. (48) The greater the uptake of FCEVs, the greater a reduction would be seen in the sector's contribution to emissions. There are also a host of health issues caused by diesel exhaust emissions, as discussed in Chapter 2. According to a study by Sydbom et al., diesel exhaust is responsible for a variety of acute, short-term health effects, including "irritation of the nose and eyes, lung function changes, respiratory changes, headache, fatigue, and nausea," in addition to a series of chronic, long-term effects, such as "cough, sputum production, and lung function decrements." (62) Shamsi et. al estimate that in a 1% FCEV scenario, there would be an annual monetary benefit of $1,450,000 due to the health benefits associated with removing diesel vehicles from the road.

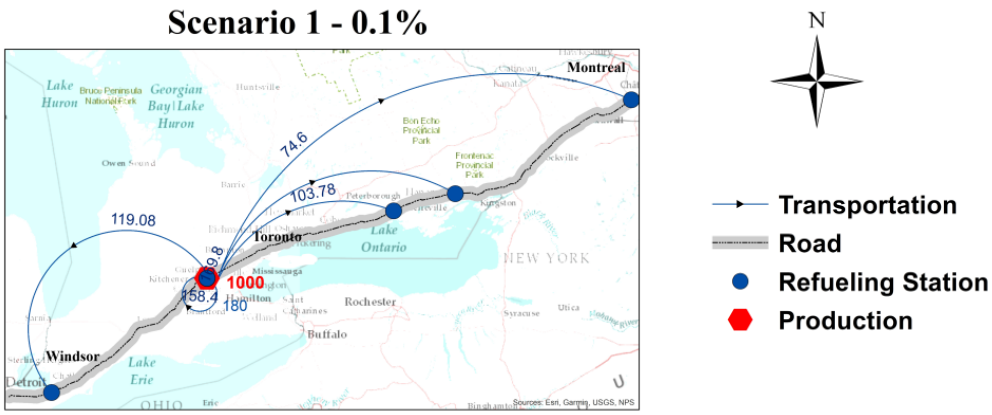

Figure 11: Proposed locations of hydrogen production and refueling stations along the 401. (10)

B – Electrolysis for the Industrial Sector

(Short-Term Action)

Oil refining processes account for 20% of global hydrogen consumption. Typically, these processes will obtain their hydrogen from methods such as steam methane reforming (SMR), which results in heavy carbon emissions. For each kg of hydrogen produced by SMR, 11 – 13 kg of CO_2e are emitted. (66) **As such, there is motivation to incorporate electrolysis into these processes so hydrogen demand may be met with fewer carbon emissions.** With Ontario's largely carbon-free power generation, there exists an opportunity to significantly de-carbonize our refineries. In 2017, **a study by Al-Subaie, Elkamel, et al. found that there was sufficient surplus electricity in Ontario to meet all provincial refinery hydrogen demand using electrolytic hydrogen for the years of 2014 – 2016.** (66)

A 2017 study by Al-Subaie, Maroufmashat, et al. provides a more in-depth examination of hydrogen production for a simulated refinery with a demand of 25 million standard cubic feet per day (MMscfd). The study considers the usage of 1 MW PEM electrolysers produced by the Canadian company Hydrogenics (now owned by Cummins). In the case of a complete transition from SMR to electrolysis, 130 electrolysers are required to meet demand. This case yields significant environmental benefits, reducing the lifecycle CO_2 emissions for the process from 235.1×10^3 tons CO_2 / year to 71.1×10^3 tons

CO_2 / year – **equivalent to removing 34,893 passenger vehicles from the road.** This case, however, presents a significant increase in production cost, so a partial implementation may be more feasible. The study also considers a case with only 65 electrolysers, which still yields a carbon reduction equivalent to 17,446 passenger vehicles. (19)

C – Rail Infrastructure and Hydrogen Locomotives

(Short-Term Action)

Currently, **in Canada, hybrid fuel cell locomotives are being investigated as a means of reducing carbon emissions from the rail sector**. Implementing hybrid fuel cell vehicles would be advantageous due to the minimal infrastructural change that would need to be committed, compared to conventional electrification. A 2017 study by Astaraki et al. investigates the implementation of hybrid locomotives along the UP express route in Toronto, where current trains release approximately 32,000 kg of carbon emissions daily. In addition to GHG reductions, the proposed hybrid system would be economical. As shown in Figure 12, annual savings of $2M can be achieved. This is due, in part, to the reduced operating cost of hybrid trains due to less frequent maintenance. (67) Furthermore, the use of a centralized refueling system for mass transit and rail applications would enable the use of rail as a means of low-cost hydrogen transport. With these considerations in mind, hydrogen infrastructure for the rail sector should be pursued in the short term.

Metrolinx has also investigated the implementation of hydrogen fuel cells on GO trains. (68) The development of vehicles and affordable electrolysis will be necessary for hybrid locomotives to become commonplace.

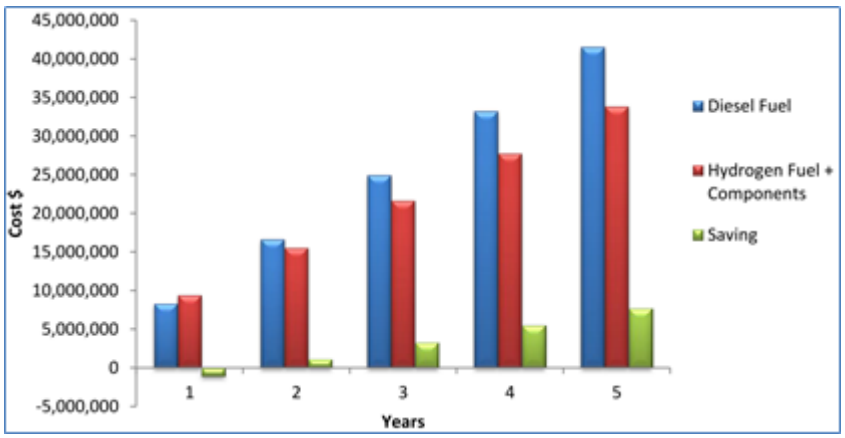

Figure 12: Fuel and component cost comparison. (67)

D – Hydrogen Infrastructure for Energy Hubs and Microgrids

(Short-Term Action)

Hydrogen has utility as an energy vector within microgrids and energy hubs. In the case of a microgrid, hydrogen can be produced electrolytically from energy supplied by distributed renewable sources, such as wind turbines or solar PV arrays installed in the local area. A 2017 study by Mukherjee et al. examines the potential implementation of one such microgrid in Cornwall, ON, encompassing a fresh food distribution center, a residential complex, and a hydrogen refueling station (Figure 13). The refueling station would serve forklifts at the distribution center, in addition to the light-duty FCEVs of the residential complex. The overall system is composed of a PV solar array, eight wind turbines, three electrolysers, and four fuel cells. **The proposed design is capable of providing 10% of the baseload energy demand for the area, as well as serving as a backup power source in the event of a grid outage for up to two days.** (69) Microgrids can also serve to provide remote communities with a more secure energy supply and reduce their reliance on fossil fuels, as demonstrated by the Gull Bay First Nation microgrid project. (70) Though Gull Bay does not utilize hydrogen, a project such as this can be used as a model for further endeavors that seek to bring hydrogen capabilities to remote communities.

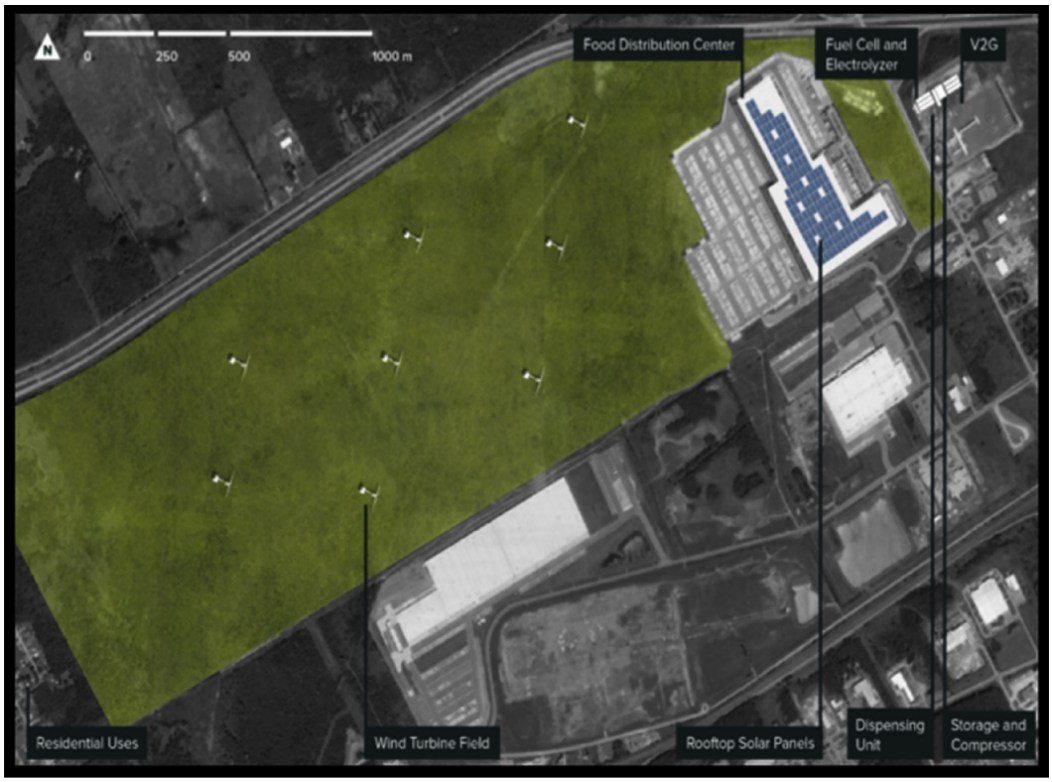

Figure 13: Proposed layout of a microgrid in Cornwall, ON. (69)

A 2016 study by Maroufmashat et al. considers the case of four energy hubs within a local area: locations that receive electricity and natural gas from the grid and transfer energy between one another as

electricity, heat, or hydrogen. The study finds that the free transmission of energy between hubs, in addition to the distributed hydrogen generation, yields benefit in terms of cost and carbon emissions. (71) Figure 14 illustrates how the different hubs would transfer energy between one another.

HENG could also play a valuable role in energy hubs and microgrids. Using HENG in natural gas applications such as heating and micro-CHP systems would reduce carbon emissions while achieving energy efficiencies of 63% and 56%, respectively. (23) This would provide an additional avenue through which hydrogen is utilized, on top of the locally generated hydrogen from electrolysers.

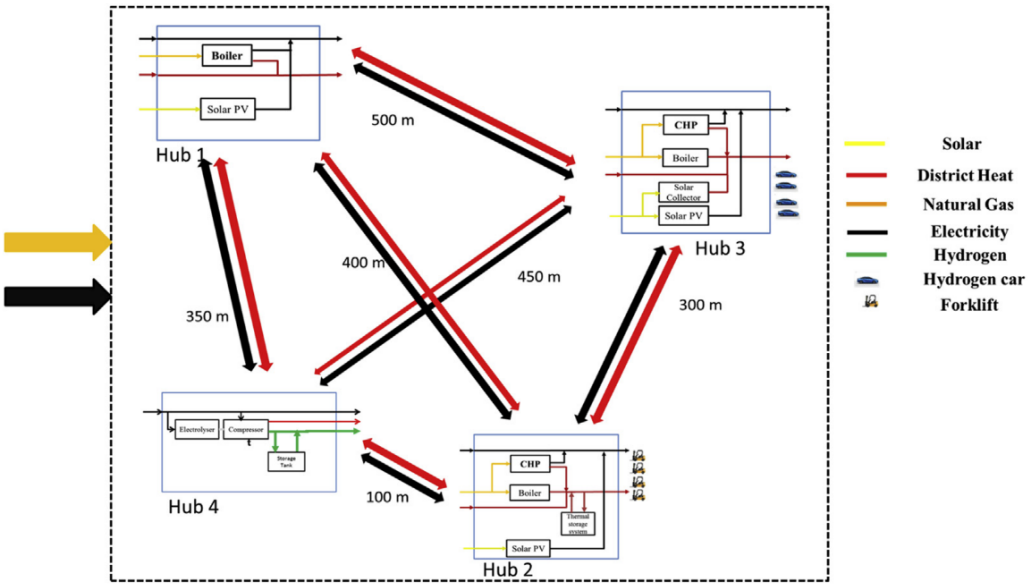

Figure 14: Diagram of energy interactions between hypothetical energy hubs. (71)

E – Conversion of Class 8 Vehicles

(Intermediate-Term Action)

Class 8 vehicles are the core of the trucking sector in Canada. The trucking sector is a necessary catalyst for the economy, and efficient trucking is necessary for the development of various other sectors, especially goods transportation.

According to Statistics Canada, Canada's exports reached $234 billion in 2019, serving almost every sector of the export economy. (72) Ontario houses around half of Canada's trucking jobs, however, the trucking sector is a major source of emissions and air pollutants. Across Canada, on-road freight produced 60 Mt of GHG emissions in 2017, accounting for 34% of all GHG emissions from transportation, in addition to being one of the major NO_x emitters. (58) **The potential hydrogen transition that can**

happen in Ontario is crucial to the trucking sector, as Ontario can drastically decarbonize its trucking fleet by converting it into hydrogen-powered fuel cell electric vehicles (FCEVs).

Trucks powered by fuel cells have lower weight penalties and better cold-temperature performance compared to battery-powered vehicles. **The transition into FCEVs in the trucking sector would lower GHG emissions, resulting in a reduction of supply chain GHG emissions for other sectors, in addition to reducing the need for imported fossil fuels**. The transition into FCEVs would increase the demand for electrolysers, which can be built at gas stations to generate fuel on-site according to the new fuel distribution model. It is estimated that 5.5 GW of electrolysers capacity is needed by Ontario to convert 80 % of the heavy trucks to FCEVs to sustain a hydrogen economy. (46) This priority action is directly related to Action A (hydrogen refueling infrastructure for the 401 and 400 corridors), as a significant public investment and private sector buy-in would be needed to get the highway 401 hydrogen freight corridor off the ground.

Figure 15 shows a breakdown of Ontario's exports through trucking, which emphasizes how crucial the heavy vehicles industry is to Ontario's economy and Canada in general.

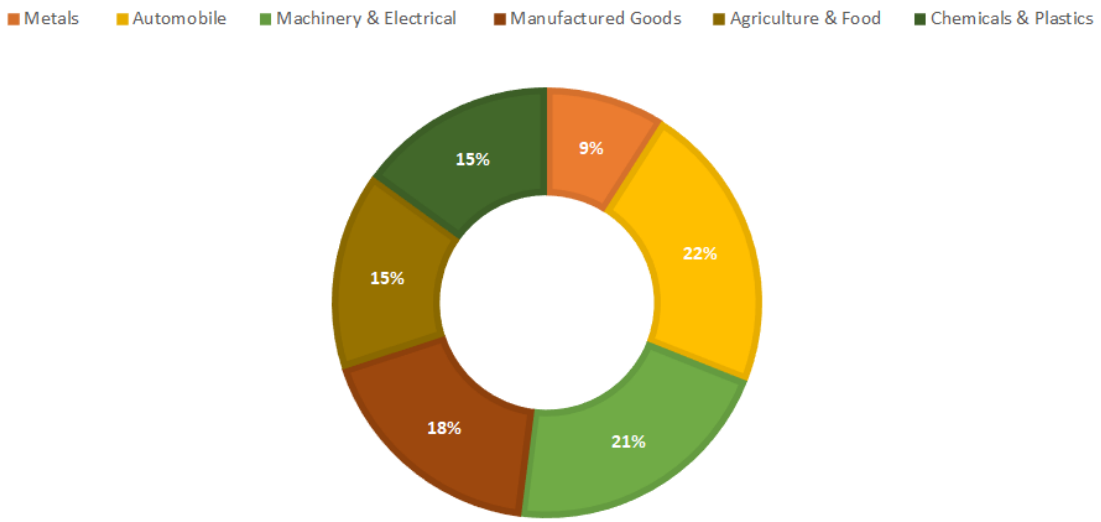

Figure 15: Ontario's exports through trucking. (46)

F – Power to Gas

(Long-Term Action)

Electrolytically produced hydrogen can be directly blended into the natural gas distribution system, in a process known as Power-to-Gas. The implementation of P2G can strengthen the processing of "green" natural gas and increase its low-carbon energy content. **Taking advantage of Ontario's existing**

natural gas systems to distribute hydrogen will allow for a gradual increase in the market uptake of hydrogen. Increased hydrogen usage will lead to a higher proportion of CO_2-free content in the natural gas stream, leading to emissions reductions and more efficient use of generation capacity in Ontario.

Furthermore, the adoption of Power-to-Gas technology – which can begin immediately through pathways such as Power to Natural Gas End User – **will result in efficient utilization of surplus nuclear and intermittent wind energy**. This transition can happen in an incremental manner depending on the natural gas markets over the next 50 to 100 years, which will take place alongside economic development towards a completely low-carbon hydrogen economy. (23) Besides, the economics of converting electricity to natural gas is not as favorable at present due to current methods of natural gas production being more economically efficient. With increasing carbon emissions costs, there could eventually be a situation where converting electricity to gas is economical, though this would appear to be some years off.

Benefits of the long-term implementation of the Power-to-Gas approach include:

- Enable the introduction of Zero-Emission Hydrogen Vehicles and supporting infrastructure, allowing continued expansion of hydrogen technology.
- Limited infrastructure costs.
- Positive impact on the global adjustment factor (saving consumers on the electricity bill).
- Make use of the already established natural gas infrastructure

A 2016 study by Mukherjee et al. illustrates the utility provided by urban energy hubs in meeting multiple energy objectives. **One notable hub in Canada is a 2 MW Power-to-Gas system developed by Hydrogenics which offers regulation services in the greater Toronto area**. (73)

G – Hydrogen Enriched Natural Gas (HENG) for the Industrial Sector

(Long-Term Action)

One Power-to-Gas pathway involves the blending of hydrogen with natural gas, providing an early source of demand with very low investment costs. The resulting gas is known as Hydrogen Enriched Natural Gas (HENG). **Pipelines can be used to transfer and distribute this HENG mixture to the end-user for pure hydrogen applications (through the process of hydrogen separation from methane), or to a combined cycle turbine to generate electricity that is sent to the grid, which allows for low-emissions production**. The environmental benefits that may be attributed to HENG are only in proportion to its hydrogen concentration. The concentration at which hydrogen is injected can be increased incrementally as hydrogen production increases. Studies have found that blending hydrogen with natural gas at concentrations of less than 5-15% by volume is viable without significantly increasing risks associated with end-use, overall public safety, or integrity of the pipeline system. (8) However, this must be considered on a case-by-case basis.

In the longer term, blending hydrogen into the natural gas distribution system may become an economic means of hydrogen transportation. Hydrogen would be injected upstream at electrolysis centers, and then directed downstream close to the point of end-use (e.g. fuel cell electric vehicle refueling stations or in stationary fuel cells). Although this would require certain purification technologies, it would greatly reduce the cost associated with building dedicated hydrogen transportation pipelines or infrastructure. (23) Ideally, a combination of existing pipelines and new pipelines can help ease the complexity and the cons that may arise besides cost. Several industrial applications for the HENG mixture are listed in Appendix G.

H – Hydrogen Conversion to Products

(Long-Term Action)

Hydrogen is a key component in many production processes, including:

- Ammonia production (53% of global hydrogen consumption) (66)
- Methanol production (10% of global hydrogen consumption)
- Metal alloying
- Flat glass production
- Electronics manufacturing (74)

Currently, 96% of hydrogen gas produced globally is sourced from fossil fuels, with electrolysis occupying the minuscule remaining 4%. (19) Naturally, converting fossil fuel-based hydrogen production to electrolysis-based production within these industries presents a tremendous opportunity for the reduction of global carbon emissions.

Ammonia is primarily used in the production of fertilizers but is also currently being studied as an energy storage medium, an energy vector (75), a fuel for power generation (76), and a fuel for locomotives. (77). A study by Ikäheimo et al. examines ammonia production in Northern Europe and finds that a transition to electrolysis for hydrogen production has little effect on system cost while yielding considerable de-carbonization benefits. (75)

Methanol is typically produced from syngas (H_2 + CO). An opportunity exists to use renewable, electrolytic hydrogen and captured CO_2 as feedstocks, which would reduce emissions on two fronts. This may be achieved through the co-electrolysis of water and CO_2 using solid oxide electrolysis technology, or simply through traditional electrolysis means. (65) Methanol can be used directly as a fuel in a combustion engine or fuel cell, or it may be converted to dimethyl ether (DME). DME may also be used as a fuel in itself, or it may be used as a feedstock in the production of other chemical products, including “short olefins (ethylene and propylene), gasoline, hydrogen, acetic acid, and dimethyl sulfate.” (78)

I – Seasonal and Underground Storage of Hydrogen

(Long-Term Action)

Energy storage implementation in Ontario

Energy storage applications can be combined with electrolysis and fuel cell applications to provide medium and long-term load shifting on the electrical network. For instance, salt caverns located in Sarnia are close to electrical export points to the US. This means the load shifting could be used to capture electricity and then exported to the US at a loss (occasionally negative prices) and feed it back through fuel cells at peak demand periods.

Meanwhile, Ontario is now running demonstrations of various storage options depending on the application. For instance, battery energy storage can be implemented for daily energy arbitrage at a facility but is not suitable for weekly or seasonal energy storage requirements. On the other hand, Power-to-Gas can be located near generation assets, e.g. wind farms, with daily battery energy storage acting as a complementary energy storage technology for long-term energy storage. A notable hydrogen energy storage project in Ontario is currently operational in the Markham Energy Storage Facility. (7) It is North America's first multi-megawatt Power-to-Gas storage facility producing hydrogen and is owned and operated under a joint venture between **Hydrogenics and Enbridge Gas Distribution**. The 2.5 MW facility is designed and built on a 5 MW scalable platform and employs Hydrogenics' PEM electrolyser technology. The facility provides regulation services under contract to the IESO, correcting for short-term changes in electricity use and compensating for real-time energy supply and demand imbalances.

Chapter 6 | Conclusion

In the implementation of a hydrogen economy, emissions-free hydrogen is produced and utilized on a widespread basis as a key energy vector that can be distributed and used for all essential energy needs. Zero-carbon emission hydrogen can be used as a fuel or for storing electricity from clean generation sources for extended periods.

While Ontario is a global leader in low-carbon energy systems, it is not free of its issues for balancing supply with demand, or economic costs with environmental and social costs in its diverse, evolving energy system. The province will face these challenges both at present and further into the future if it does not take advantage of hydrogen technologies as a significant part of its energy system. **This report identified several general hydrogen technology applications that are suitable for deployment in Ontario and Canada and provided an explanatory background for each of them.** Each of these applications was chosen based on considerations of their associated carbon intensity levels, their fit in the provincial and national energy sector contexts, and the promise they show for bettering our energy systems in performance and a neutral carbon footprint.

Given that 2050 marks an overarching zero-emissions goal for Ontario, appropriate policies must be established shortly to guide the continuing progress moving ahead. This report provided 12 policy priorities for today to best lead the province's zero-emissions progress into tomorrow. Finally, the report offers nine priority areas for government, industry, and other stakeholders to strategically deploy hydrogen technology in the province. Each of these is discussed in fuller detail in the Appendices.

This report's recommendations for policy and technology deployment aim to ultimately shape a made-in-Ontario hydrogen economy that reliably fulfills the province's energy needs and helps fight climate change. Internationally beyond Ontario, other regions and countries are also seeing the benefits of committing to the hydrogen movement. If effective hydrogen strategies are planned and implemented to work together with each provinces' distinct strengths, then Ontario and the rest of Canada are poised to become leaders in a global hydrogen movement.

References

1. Butterworth S, Hill N, Kallamthodi S. Feasibility Study Into The Use Of Hydrogen Fuel. 2005;114.
2. Department of Economic and Social Affairs UN. THE 17 GOALS [Internet]. 2018. Available from: https://sdgs.un.org/goals
3. Orecchini F, Naso V. Energy systems in the era of energy vectors. 2012. 362 p.
4. CEA-Liten. Hydrogen as an energy vector. Renewable and Sustainable Energy Reviews.
5. Haseli Y, Naterer GF, Dincer I. Comparative assessment of greenhouse gas mitigation of hydrogen passenger trains. Int J Hydrogen Energy. 2008;33(7):1788–96.
6. Ewing M, Israel B, Jutt T, Talebian H, Stepanik L. Hydrogen on the path to net-zero emissions Costs and climate benefits. Pembin Inst [Internet]. 2020;(July). Available from: https://www.pembina.org/pub/hydrogen-primer
7. Zhao W, Stasko R. The Present Status of Hydrogen Technologies and Project Deployments in Ontario and Canada with an Overview of Global H2 Activities. 2019.
8. Melaina M, Antonia O, Penev M. Blending Hydrogen into Natural Gas Pipeline Networks: A Review of Key Issues. Contract. 2013;303(March):275–3000.
9. Mukherjee U, Elsholkami M, Walker S, Fowler M, Elkamel A, Hajimiragha A. Optimal sizing of an electrolytic hydrogen production system using an existing natural gas infrastructure. Int J Hydrogen Energy [Internet]. 2015;40(31):9760–72. Available from: http://dx.doi.org/10.1016/j.ijhydene.2015.05.102
10. Shamsi H, Tran M-K, Akbarpour S, Maroufmashat A, Fowler M. Macro-Level Optimization of Hydrogen Infrastructures and Supply Chain for Fuel Cell Electric Trucks on a Canadian Corridor. J Clean Prod. 2020;
11. Harvey R. Power-to-Gas for Hydrogen Fuel Cell Commuter Trains. 2016;
12. CCC. UK regulations: the Climate Change Act. Comm Clim Chang. 2018;2050(November).
13. Joffe D, Livermore S, Hemsley M, Stark C, Gault A, Thompson M, et al. Hydrogen in a low-carbon economy. 2018.
14. Jensterle M, Narita J, Piria R, Samadi S, Prantner M, Crone K, et al. The role of clean hydrogen in the future energy systems of Japan and Germany. Berlin: adelphi. 2019;6(August):2019.
15. COAG Energy Council. Australia's National Hydrogen Strategy. 2019.
16. Energy Independence Now. Renewable Hydrogen Roadmap. 2018.
17. Natural Resources Canada. 2019 Hydrogen Pathways – Enabling a Clean Growth Future for Canadians (Executive Summary). 2019.
18. Natural Resources Canada. Hydrogen Strategy for Canada: Seizing the Opportunities for Hydrogen - A Call to Action. 2020.
19. Al-Subaie A, Maroufmashat A, Elkamel A, Fowler M. Presenting the implementation of power-to-gas to an oil refinery as a way to reduce carbon intensity of petroleum fuels. Int J Hydrogen

Energy [Internet]. 2017;42(30):19376–88. Available from: http://dx.doi.org/10.1016/j.ijhydene.2017.06.067

20. IEA. The clean hydrogen future has already begun [Internet]. 2019. Available from: https://www.iea.org/commentaries/the-clean-hydrogen-future-has-already-begun

21. Ministry of Economic Affairs and Climate. Government Strategy on Hydrogen. Report. 2020;(387):1–14.

22. Naterer GF, Suppiah S, Stolberg L, Lewis M, Ferrandon M, Wang Z, et al. Clean hydrogen production with the Cu-Cl cycle-Progress of international consortium, I: Experimental unit operations. Int J Hydrogen Energy. 2011;36(24):15472–85.

23. Maroufmashat A, Fowler M. Transition of future energy system infrastructure; through power-to-gas pathways. Energies. 2017;10(8).

24. Walker SB, Mukherjee U, Fowler M, Elkamel A. Benchmarking and selection of Power-to-Gas utilizing electrolytic hydrogen as an energy storage alternative. Int J Hydrogen Energy [Internet]. 2016;41(19):7717–31. Available from: http://dx.doi.org/10.1016/j.ijhydene.2015.09.008

25. Office of Energy Efficiency and Renewable Energy. Hydrogen Production: Natural Gas Reforming. United States Department of Energy.

26. Office of Energy Efficiency and Renewable Energy. Hydrogen Production: Coal Gasification. United States Department of Energy.

27. Ghazvini M, Sadeghzadeh M, Ahmadi MH, Moosavi S, Pourfayaz F. Geothermal energy use in hydrogen production: A review. Int J Energy Res. 2019;43(14):7823–51.

28. Rezaee P, Naeij HR. A new approach to separate hydrogen from carbon dioxide using graphdiyne-like membrane. Sci Rep. 2020;10(1):1–13.

29. Buttler A, Spliethoff H. Current status of water electrolysis for energy storage, grid balancing and sector coupling via power-to-gas and power-to-liquids: A review. Renew Sustain Energy Rev. 2018;82(September 2017):2440–54.

30. Hossain E, Faruque HMR, Sunny MSH, Mohammad N, Nawar N. A comprehensive review on energy storage systems: Types, comparison, current scenario, applications, barriers, and potential solutions, policies, and future prospects. Energies. 2020;13(14):1–127.

31. Yu Y, Ludwig KF, Woicik JC, Gopalan S, Pal UB, Kaspar TC, et al. Effect of Sr Content and Strain on Sr Surface Segregation of La1-xSrxCo0.2Fe0.8O3-δ as Cathode Material for Solid Oxide Fuel Cells. ACS Appl Mater Interfaces. 2016;8(40):26704–11.

32. Hubert M, Laurencin J, Cloetens P, Morel B, Montinaro D, Lefebvre-Joud F. Impact of Nickel agglomeration on Solid Oxide Cell operated in fuel cell and electrolysis modes. J Power Sources. 2018;397(June):240–51.

33. Chen M, Sun X, Chatzichristodoulou C, Koch S, Hendriksen PV, Mogensen MB. Thermoneutral Operation of Solid Oxide Electrolysis Cells in Potentiostatic Mode. ECS Trans. 2017;78(1):3077–88.

34. Locatelli G, Mancini M, Todeschini N. Generation IV nuclear reactors: Current status and future prospects. Energy Policy. 2013;61:1503–20.

35. Naterer GF, Suppiah S, Stolberg L, Lewis M, Wang Z, Dincer I, et al. Progress of international hydrogen production network for the thermochemical Cu-Cl cycle. Int J Hydrogen Energy. 2013;38(2):740–59.

36. Nikolaidis P, Poullikkas A. A comparative overview of hydrogen production processes. Renew Sustain Energy Rev. 2017;67:597–611.

37. Cetinkaya E, Dincer I, Naterer GF. Life cycle assessment of various hydrogen production methods. Int J Hydrogen Energy. 2012;37(3):2071–80.

38. Haghi E, Kong Q, Fowler M, Raahemifar K, Qadrdan M. Assessing the potential of surplus clean power in reducing GHG emissions in the building sector using game theory; a case study of Ontario, Canada. IET Energy Syst Integr. 2019;1(3):184–93.

39. Lemieux A, Sharp K, Shkarupin A. Preliminary assessment of underground hydrogen storage sites in Ontario, Canada. Int J Hydrogen Energy [Internet]. 2019;44(29):15193–204. Available from: https://doi.org/10.1016/j.ijhydene.2019.04.113

40. Florida Solar and Energy Center. Hydrogen - Storage [Internet]. Available from: https://www.energy.gov/eere/fuelcells/hydrogen-production-electrolysis]. [http://www.fsec.ucf.edu/en/consumer/hydrogen/basics/storage.htm

41. Energy.gov. Hydrogen Storage [Internet]. 2020. Available from: https://www.energy.gov/eere/fuelcells/hydrogen-storage

42. Gibson J. Fuel Cells [Internet]. 1999. Available from: https://www.canadianconsultingengineer.com/features/fuel-cells/

43. Canadian Hydrogen and Fuel Cell Association. FUEL CELLS – THE SUSTAINABLE POWER SOURCE [Internet]. 2016. Available from: http://www.chfca.ca/fuel-cells-hydrogen/about-fuel-cells/#:~:text=There are six main types,AFC (alkaline fuel cell

44. Bagotskii VS, Skundin AM, Volfkovich YM. Electrochemical power sources: batteries, fuel cells, and supercapacitors. 2015.

45. Jain N, Roy A, Jain R, Karmakar NC. Polymer Electrolyte Membrane Fuel Cells : Alternative to fossil fuels for power supply to Heavy Earth Moving and Allied Machinery in Mining and Civil Engineering Industry. Dragline Min Prospect Challenges, Singrauli, North Coal F Ltd. 2013;(June 2014).

46. Green Ribbon Panel. 2020 Green Ribbon Panel Report: Clean Air, Climate Change and Practical, Innovative Solutions - Policy Enabled Competitive Advantages Tuned for Growth. 2020.

47. Office of the Auditor General Ontario. Electricity Power System Planning. 2015 Annu Rep. 2015;206–42.

48. Canada Energy Regulator. Provincial and Territorial Energy Profiles – Ontario [Internet]. 2020. Available from: https://www.cer-rec.gc.ca/en/data-analysis/energy-markets/provincial-territorial-energy-profiles/provincial-territorial-energy-profiles-ontario.html

49. Brouillette M. Ontario's Emissions and the Long- Term Energy Plan Final Report. 2016;

50. Bird L, Cochran J, Wang X. Wind and Solar Energy Curtailment: Experience and Practices in the

United States. Natl Renew Energy Lab. 2014;(March):58.

51. Rose S, Apt J. The cost of curtailing wind turbines for secondary frequency regulation capacity. Energy Syst. 2014;5(3):407–22.

52. IESO. 2019 Year in Review. 2020;

53. Market Intelligence and Data Analysis Corporation, Next Hydrogen. Grid Integrated Electrolysis – Facilitating Carbon Emission Reductions in the Transportation, Industrial and Residential Sectors. 2016.

54. Koch AK, Fowler MW, Fraser RA. Implementation of a fuel cell plug-in hybrid electric vehicle and factors affecting transportation policy. Int J Energy Res. 2011;35(15):1371–88.

55. Yauch B, Mitchnick S. Power Exports at What Cost? 2016.

56. Dougherty W, Kartha S, Rajan C, Lazarus M, Bailie A, Runkle B, et al. Greenhouse gas reduction benefits and costs of a large-scale transition to hydrogen in the USA. Energy Policy. 2009;37(1):56–67.

57. Environment and Climate Change Canada. Canadian Environmental Sustainability Indicators: Air pollutant emissions. 2019.

58. Government of Canada. Air pollutant emissions [Internet]. 2019. Available from: https://www.canada.ca/en/environment-climate-change/services/environmental-indicators/air-pollutant-emissions.html

59. EPA. National Air Quality: Status & Trends through 2007. Research Triangle Park, North Carolina; 2008.

60. Environment and Climate Change Canada. Air pollution from cars, trucks, vans and SUVs. 2017.

61. Toronto Public Health. Path To Healthier Air: Toronto Air Pollution Burden of Illness Update. Toronto Public Heal. 2014;33.

62. Sydbom A, Blomberg A, Parnia S, Stenfors N, Sandstrom T, Dahlen S-E. Health effects of diesel exhaust. Eur Respir J. 2001;17(4):733–46.

63. Statistics Canada. Population change by census metropolitan area. 2020.

64. Stevens MB, Fowler MW, Elkamel A, Elhedhli S. Macro-level optimized deployment of an electrolyser-based hydrogen refuelling infrastructure with demand growth. Eng Optim. 2008;40(10):955–67.

65. Canadian Urban Transit Research & Innovation Consortium. Pan-Canadian Hydrogen Fuel Cell Electric Bus Demonstration and Integration Trial. 2020. p. 1–9.

66. Al-Subaie A, Elkamel A, Mukherjee U, Fowler M. Exploring the potential of power-to-gas concept to meet Ontario's industrial demand of hydrogen. 2017 5th IEEE Int Conf Smart Energy Grid Eng SEGE 2017. 2017;336–40.

67. Astaraki GS, Keswani K, Mackay M. Hybrid Locomotive Design for the UP Express. 2017;

68. Union Pearson Express. UP EXPRESS : TRAIN FACTS. 2015;

69. Mukherjee U, Maroufmashat A, Ranisau J, Barbouti M, Trainor A, Juthani N, et al. Techno-

economic, environmental, and safety assessment of hydrogen powered community microgrids; case study in Canada. Int J Hydrogen Energy. 2017;42(20):14333–49.

70. Ontario Power Generation. Community micro grid project now online. 2019.

71. Maroufmashat A, Fowler M, Sattari Khavas S, Elkamel A, Roshandel R, Hajimiragha A. Mixed integer linear programing based approach for optimal planning and operation of a smart urban energy network to support the hydrogen economy. Int J Hydrogen Energy. 2016;41(19):7700–16.

72. Statistics Canada. Latest Developments in the Canadian Economic Accounts [Internet]. 2019. Available from: https://www150.statcan.gc.ca/n1/pub/13-605-x/2018001/article/54962-eng.htm

73. Mukherjee U, Walker S, Maroufmashat A, Fowler M, Elkamel A. Power-to-gas to meet transportation demand while providing ancillary services to the electrical grid. 2016 4th IEEE Int Conf Smart Energy Grid Eng SEGE 2016. 2016;221–5.

74. Hydrogen Europe. Hydrogen in Industry.

75. Ikäheimo J, Kiviluoma J, Weiss R, Holttinen H. Power-to-ammonia in future North European 100 % renewable power and heat system. Int J Hydrogen Energy. 2018;43(36):17295–308.

76. Valera-Medina A, Xiao H, Owen-Jones M, David WIF, Bowen PJ. Ammonia for power. Prog Energy Combust Sci. 2018;69:63–102.

77. Hogerwaard J. Comparative study of ammonia-based clean rail transportation systems for Greater Toronto area. MASc Thesis. 2014;(April):1–104.

78. Dalena F, Senatore A, Marino A, Gordano A, Basile M, Basile A. Methanol Production and Applications: An Overview. Methanol Sci Eng. 2018;3–28.

79. ECCC. Greenhouse Gas Emissions- CANADIAN ENVIRONMENTAL SUSTAINABILITY INDICATORS. Encycl Soils Environ. 2020;4:145–53.

80. Cleworth J, Hovey G, Seo G, Singh K. Design and Modeling of Fuel Cell-Battery Hybrid Locomotive.

81. Witynski M. North Bay completes Canada's first utility-scale microgrid. 2019. p. 1–3.

82. MURRAY M. Commercial Motor Vehicle Classification [Internet]. 2019. Available from: https://www.thebalancesmb.com/commercial-motor-vehicle-classification-2221025

83. Nhcleancities.org. What are the various vehicle weight classes and why do they matter? [Internet]. 2016. Available from: http://nhcleancities.org/2016/04/various-vehicle-weight-classes-matter/

84. Maroufmashat A, Mukherjee U, Fowler M, Elkamel A. Power-to-gas: A new energy storage concept for integration of future energy systems. Oper Planning, Anal Energy Storage Syst Smart Energy Hubs. 2018;411–23.

85. Sharpe B. Zero-emission tractor-trailers in Canada. Int Counc Clean Transp Work Pap. 2019;(March):169.

86. van Lanen D, Walker SB, Fowler M, Mukherjee U. Market mechanisms in power-to-gas systems. Int J Environ Stud. 2016;73(3):379–89.

87. Eichman J, Harrison K, Peters M, Eichman J, Harrison K, Peters M. Novel Electrolyzer Applications : Providing More Than Just Hydrogen Novel Electrolyzer Applications : Providing More Than Just Hydrogen. NREL Rep [Internet]. 2014;(September):1–24. Available from: http://www.nrel.gov/docs/fy14osti/61758.pdf

88. Jaffe AM, Ogden J. Is Natural Gas the Transition Fuel for Hydrogen? [Internet]. 2018. Available from: [Is Natural Gas the Transition Fuel for Hydrogen? By Amy Myers Jaffe and Joan https://its.ucdavis.edu/blog-post/ greenlight-blog-is-natural-gas-the-transition-fuel-for-hydrogen/on 3 June 2014.

89. Götz M, Lefebvre J, Mörs F, McDaniel Koch A, Graf F, Bajohr S, et al. Renewable Power-to-Gas: A technological and economic review. Renew Energy. 2016;85:1371–90.

90. Wilson D, Teichroeb D. Power-to-Gas : Utility-Scale Energy Storage. 2012;

91. Penev M, Melaina M, Bush B, Muratori M, Warner E, Penev M, et al. Low-Carbon Natural Gas for Transportation : Well-to-Wheels Emissions and Potential Market Assessment in California Low-Carbon Natural Gas for Transportation : Well-to-Wheels Emissions and Potential Market Assessment in California. Joint Institute for Strategic Energy Analysis. 2016.

92. Dodds PE, Demoullin S. Conversion of the UK gas system to transport hydrogen. Int J Hydrogen Energy. 2013;38(18):7189–200.

93. Andika R, Nandiyanto ABD, Putra ZA, Bilad MR, Kim Y, Yun CM, et al. Co-electrolysis for power-to-methanol applications. Renew Sustain Energy Rev. 2018;95(December 2017):227–41.

94. Fowler M. Power to Gas Pathways. :1–17.

95. Gutiérrez-Martín F, Rodríguez-Antón LM. Power-to-SNG technology for energy storage at large scales. Int J Hydrogen Energy. 2016;41(42):19290–303.

96. Fowler M. Power to Gas Pathways. 2007.

97. Peng DD, Fowler M, Elkamel A, Almansoori A, Walker SB. Enabling utility-scale electrical energy storage by a power-to-gas energy hub and underground storage of hydrogen and natural gas. J Nat Gas Sci Eng [Internet]. 2016;35(Part A):1180–99. Available from: http://dx.doi.org/10.1016/j.jngse.2016.09.045

98. Maroufmashat A, Fowler M. Low-carbon transportation pathways through power-to-gas. 2017 5th IEEE Int Conf Smart Energy Grid Eng SEGE 2017. 2017;353–6.

99. Schoenung S. Economic Analysis of Large-Scale Hydrogen Storage for Renewable Utility Applications. Sandia Rep [Internet]. 2011;(August):1196–9. Available from: http://prod.sandia.gov/techlib/access-control.cgi/2011/114845.pdf

Appendix A – Hydrogen Refueling Infrastructure on the 401 and 400 Highway Corridors

An excellent opportunity to implement hydrogen technology currently exists along Ontario's Highway 401, a portion of the North American Superhighway Corridor (NASCO). The highway sees a large amount of heavy-duty truck traffic every day, meaning a partial conversion of the current diesel fleet to hydrogen fuel cell vehicles would yield significant environmental and health benefits. Figure 16 shows the distribution of total traffic and truck traffic along the 401. Trucks are a good target for fuel cell technology, thanks to the long-range granted by hydrogen's high energy density and the quick refueling potential. Hydrogen fuel cell technology also avoids some of the issues of BEVs, such as battery degradation. (73) Due to the consistent, predictable routes taken by these vehicles, they are also ideal targets to transition to hydrogen because the fleet could function with only a small number of intelligently placed refueling stations. A study by Shamsi et al. proposes an optimized layout of refueling stations and electrolytic production sites along the 401 for different levels of hydrogen market penetration (i.e. the percentage of Class 7-10 diesel trucks using hydrogen fuel cells). Existing ONroute rest stops are proposed as refueling/production sites, which would take advantage of existing infrastructure. The earliest likely scenario discussed in the study is that of 0.1% market penetration, which would be optimally supported by the refueling and production layout shown in Table 4 and Figure 17. **A small, initial investment in hydrogen infrastructure such as this would prompt further investment in the area, in addition to lowering the per-kilogram cost of hydrogen.** (10)

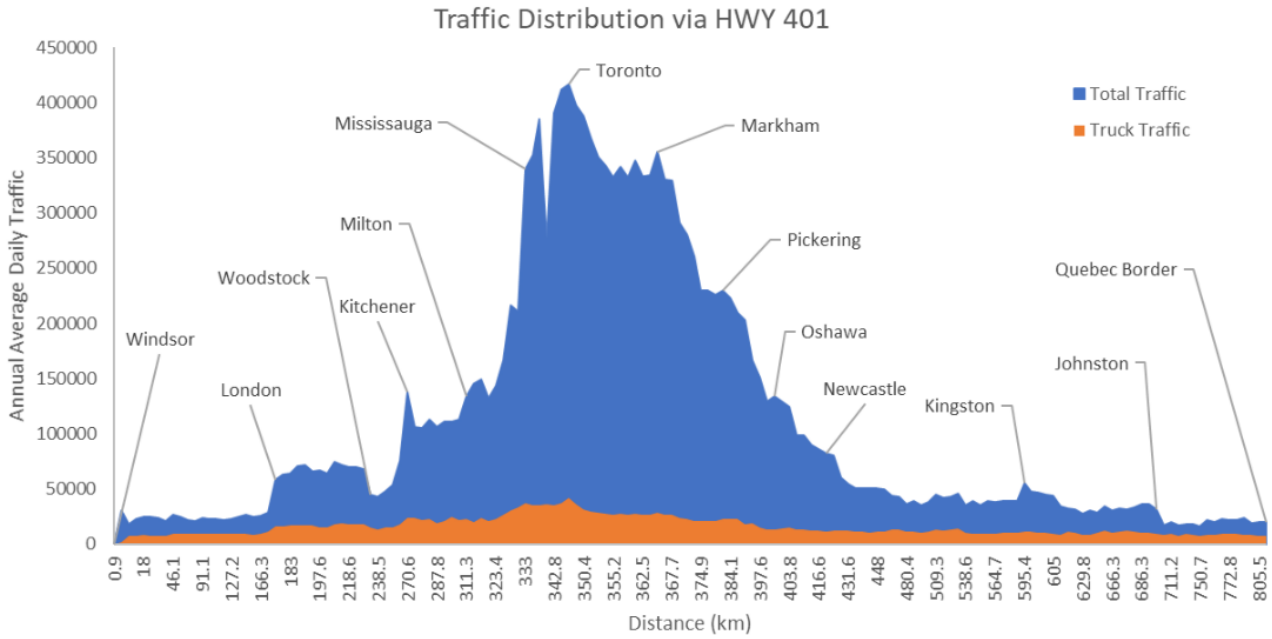

Figure 16: Total traffic and truck traffic distribution along Highway 401. (10)

Table 4: Specification of refueling infrastructure for 0.1% case. (10)

Type of Infrastructure	Location	Size (kg H_2 / day)
Production plant	14	1000
Refueling station	1	180
	4	180
	7	180
	10	180
	14	180
	16	180

A transition toward FCEV technology would yield considerable environmental benefits. In 2018, the transportation sector accounted for 25% of overall emissions in Canada, 35% of which was caused by heavy-duty trucks. (79) In Ontario, the transportation sector's share of emissions is even higher, at 35%. (48) Due to the zero-emission nature of FCEVs, the public will also enjoy a host of health benefits. A 2014 report by Toronto Public Health estimated that air pollution emitted by vehicles accounted for 280 premature deaths and 1090 hospitalizations annually, within Toronto alone. (61) Emissions from the diesel engines typically found in heavy-duty trucks are of particular concern: diesel exhaust particles often comprise a large proportion of particulate emissions within a given area.

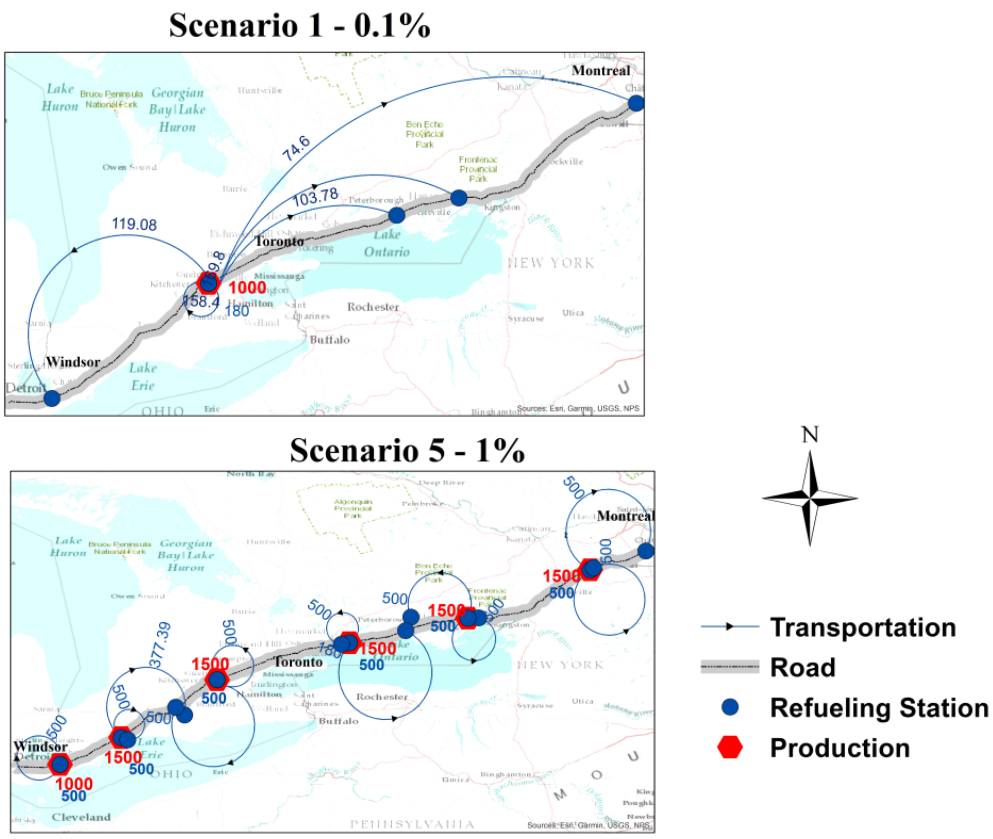

Figure 17: Proposed locations of hydrogen production and refueling stations along the 401. (10)

According to a study by Sydbom et al., diesel exhaust is responsible for a variety of acute, short-term health effects, including “irritation of the nose and eyes, lung function changes, respiratory changes, headache, fatigue, and nausea,” in addition to a series of chronic, long-term effects, such as “cough, sputum production, and lung function decrements.” (62) With these health and environmental benefits come monetary benefits. Shamsi et al. estimate monetary savings of $145,000 annually due to reduced pollution-related health costs. (10) The study by Shamsi also explores scenarios in which the market penetration of FCEV trucks is even higher: models were also created for 0.2%, 0.3%, 0.4%, and 1% cases. The case of a 1% market share is likely not a short-term possibility but provides an idea of what an optimal infrastructure setup would look like when hydrogen is more widely adopted. At present, there is a “chicken and egg” dilemma surrounding the construction of hydrogen infrastructure: refueling infrastructure must be in place for widespread adoption of FCEVs to take place, but there is a reluctance to invest in refueling infrastructure without a large-scale adoption of FCEVs to fuel. (64) This further illustrates the importance of initial, small-scale demonstrations, such as the proposed 0.1% scenario described previously.

In the 1% scenario, 17 refueling stations and six hydrogen generation stations would be deployed along the 401, producing a total hydrogen yield of 7500 kg/day and yielding even greater health-related savings from reduced emissions of $1.45M annually. Figure 17 illustrates the proposed layout of refueling and generation infrastructure. (10) This 1% scenario would be a longer-term goal after the technology is effectively demonstrated as a success. Though not discussed in the study, another long-term objective would involve the expansion of hydrogen fueling stations along the 400-highway corridor, permitting FCEV to travel toward northern communities and the Trans-Canada Highway.

Of course, heavy-duty trucks are not the only portion of the transportation sector where hydrogen could be implemented. A greater amount of hydrogen fueling infrastructure would prompt a greater uptake of light FCEVs among enthusiastic early adopters. The federal government has set a target for 10% of light vehicles sold in 2025 to be zero-emission vehicles (ZEVs) and 100% of light vehicles by 2040. (18) Though battery electric vehicles would likely dominate the light vehicle market, FCEVs can present an attractive alternative if sufficient fueling infrastructure is in place. Transit buses also present another transportation area where hydrogen may be implemented. CUTRIC currently plans to launch its Pan-Canadian Hydrogen Fuel Cell Electric Bus Demonstration and Integration Trial, a shovel ready demonstration project wherein 30 fuel cell buses will be launched and analyzed for their entire lifespan. (65) If a transit agency can demonstrate the feasibility of FCEV technology, implementation could extend to other jurisdictions and a new market of hydrogen consumers would be established.

Appendix B – Electrolysis for the Industrial Sector

Globally, the largest consumers of hydrogen are industrial processes. Ammonia production accounts for 53% of hydrogen consumption, while oil refining processes account for 20%. Typically, **these processes obtain their hydrogen from processes such as steam methane reforming (SMR), which results in heavy carbon emissions. For each kg of hydrogen produced by SMR, 11 – 13 kg of CO_2 is emitted**. As such, there is motivation to incorporate electrolysis into these processes so hydrogen demand may be met with fewer carbon emissions. With Ontario's largely carbon-free power generation, there exists an opportunity to significantly de-carbonize our industries. (66) A 2017 study by Al-Subaie, Elkamel, et al. examines the hydrogen usage of the industry in Ontario and evaluates the feasibility of electrolysis to meet these demands. The study considers using only surplus electricity (i.e. power that is exported or curtailed) to produce electrolytic hydrogen and finds that for the years 2014 – 2016, there is sufficient hydrogen to meet all oil refinery demand, in addition to covering most of the demand of other industries.

The study illustrates that integrating electrolysis into industrial processes would be an excellent way to reduce the carbon footprint of the processes, in addition to promoting investment into electrolysis technology. This is an action that could be taken in the immediate term and avoids issues such as the "chicken and egg" dilemma faced by the transportation sector when trying to implement hydrogen technology.

A 2017 study by Al-Subaie, Maroufmashat, et al. examines hydrogen usage in oil refineries in more detail. Within an oil refinery, there exist several processes that use hydrogen gas as an input, including hydrotreating and hydrocracking processes. Figure 18 illustrates the processes which produce and consume hydrogen within a typical refinery. Hydrogen demand is also increasing due to regulations on the sulfur content of fossil fuels, as well as the pressure for refineries to extract more value from crude oil which is heavier and sourer (i.e. containing a higher sulfur content). (19)

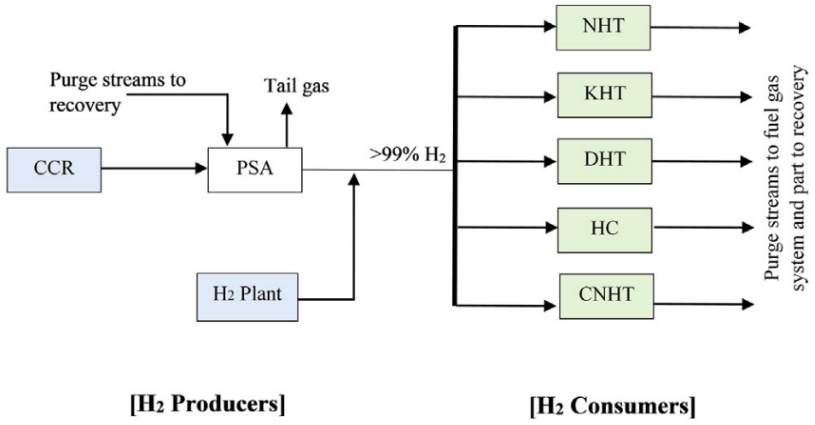

Figure 18: Hydrogen-consuming processes in the refinery. (19)

The study considers several scenarios where electrolytic hydrogen is used in different capacities. From the simulation, the hydrogen demand for the refinery is found to be 25 MMscfd (million standard cubic

feet per day). This demand is met, in part or whole, by a series of 1 MW PEM electrolysers, produced by Canadian company Hydrogenics (now owned by Cummins). The study then determines the number of electrolysis required and the operating conditions necessary to minimize costs.

Table 5 summarizes the results of the optimization for each scenario.

Table 5: Results from simulated refinery scenarios. (19)

Scenario	Hydrogen production scheme for the refinery	No. of 1 MW electrolysers	Hydrogen production cost (2015$ / kg)	Life cycle CO_2e emissions (10^3 tons / year)
1	Total production from SMR	-	-1.1	235.1
2	Total production from electrolysis	130	2.5	71.1
3	Half production from electrolysis and the other half by SMR	65	1.8	153.1
4	Total production from electrolysis based on nuclear and renewables grid	130	2.5	13.6
5	Total production from electrolysis during low electricity prices (off-peak period)	427	5.9	36.0

As the table illustrates, a complete transition to electrolysis would yield a considerable carbon benefit – a reduction from 235.1 × 10^3 tons CO_2 emissions per year to 71 × 10^3 tons per year. Assuming the average passenger vehicle emits 4.7 metric tons of CO_2 annually, **a changeover to electrolysis would be equivalent to removing 34,893 passenger vehicles from the road.** An even greater reduction is possible if the electrolysis is powered entirely by the carbon-free electricity available in Ontario from nuclear and renewable sources. (19)

However, with this considerable carbon benefit comes the drawback of a much higher cost. With electrolysis, the cost per kg of hydrogen is more than doubled from $1.1 per kg hydrogen to $2.5 per kg. This high cost may be addressed through carbon taxing and an increase in natural gas prices. If the government were to impose such price increases to meet emissions targets, electrolysis would become more competitive. Alternatively, a partial implementation of electrolysis could be implemented. Scenario 3 in Table 3 shows that if only half of the hydrogen demand is met via electrolysis, a much more moderate increase of $1.8 per kg would be incurred, while still reducing emissions equivalent to 17,446 passenger vehicles. Scenario 3 may act as an ideal model for a gradual introduction of the technology

and may also reduce the need for refineries to expand/upgrade their SMR processes. This scenario becomes even more competitive with carbon taxation and natural gas price increases. (19)

Appendix C – Rail Infrastructure and Hydrogen Locomotives

In Canada, hybrid locomotives using hydrogen are being developed/considered to replace diesel-powered locomotives, which will reduce GHG emissions significantly. **One of the key advantages to the transition to fuel cell locomotives and possible fuel cell hybrids is the lack of extensive infrastructure alterations and distributions**. The fuel cell hybrid locomotives can take advantage of the current railways and modified fueling stations that are used to dispense hydrogen fuel. From an economic perspective, the capital and maintenance costs for fuel cell-powered locomotives are relatively higher than for its diesel engine competitors. However, the right implementation of the fuel cell hybrid locomotive can contribute to decreasing the operating cost as they provide longer durations between maintenance cycles.

A study was conducted in 2017 by Astaraki et al., to develop a locomotive model for the UP Express route (that currently runs on the Toronto Union Pearson Express route). These trains release approximately 32,000 kg of GHG emissions/day. (67) A hybrid locomotive would require minimal infrastructure changes compared to an electrified locomotive. Besides, it would achieve the current operating schedule and follow Ontario's green plan, which involves the reduction of emissions compared to the current Diesel Multiple Units system. (80)

The study concluded several points that detail the impact of the implementation of hybrid locomotives powering systems instead of the Diesel Units system:

- The total cost of the hydrogen fuel would be less than what is currently required for the diesel trains, resulting in an estimated cost savings of $2 million annually.
- The hybrid locomotive produces zero end-of-pipe emissions per day as compared to the Metrolinx estimate of 32,509 kg of GHG emissions produced per day by the current train.
- The production of hydrogen fuel is less emissions-intensive than diesel production, so the overall life cycle emissions for the hybrid locomotive design are also significantly lower than the current train.

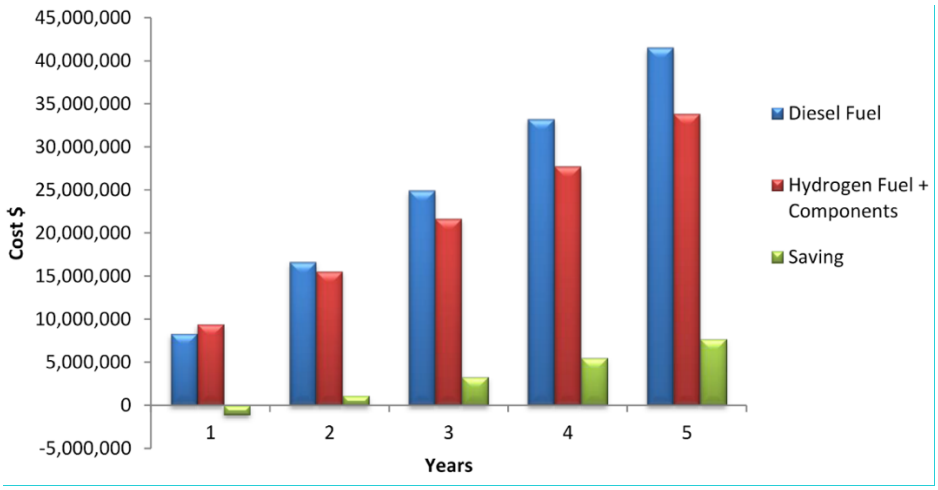

Figure 19: Fuel and component cost comparison. (67)

Ontario Industrial example

Metrolinx has launched its 10-year Regional Express Rail Program (RER). (68) It is the largest transit infrastructure program in Canada that will bring faster and broader services by expansion and electrification of the GO Transit network. In 2017, Metrolinx conducted a feasibility study using hydrogen fuel cells to electrify the GO trains as an alternative to using conventional overhead wires.

Some of the issues that accompany these projects are the time-consuming processes of integration of hydrogen fuel cell systems into commuter trains and the production of new vehicles, which may delay the milestone set for 2025. Another issue is the electricity price since the electrolysis procedure of producing hydrogen needs a significant amount of electricity. However, this initiative is promising as it will not only reduce GHG emissions significantly but also yield economic benefits and enhance the public acceptance of hydrogen technology in Ontario.

Appendix D – Hydrogen Infrastructure for Energy Hubs and Microgrids

An important use of hydrogen will also be as an energy vector within a microgrid or local energy hub. A microgrid is comprised of distributed power generation (e.g. a solar array or wind turbine) and any necessary energy storage technology to provide electricity to a local area, generate hydrogen as a fuel for FCEVs or heating, and even potentially sell energy back to the larger grid to improve profitability. (69) An energy hub, on the other hand, receives input energy from the grid in the form of natural gas and electricity and uses it to produce electrolytic hydrogen and heat. Hubs within a local area may then transfer electricity, heat, and hydrogen between one another as needed. This integration of different energy carriers leads to improved efficiency, economics, and environmental impacts. (71) In the case of a microgrid, hydrogen can be produced electrolytically from energy supplied by distributed renewable sources, such as wind turbines or solar PV arrays installed in the local area.

A 2017 study by Mukherjee et al. examines the implementation of one such microgrid in Cornwall, ON, encompassing a fresh food distribution center, a residential complex, and a hydrogen refueling station. The refueling station would serve the forklifts at the distribution center, in addition to the light-duty FCEVs of the residential complex. The proposed design can provide 10% of the baseload energy demand for the area, in addition to serving as a backup power source in the event of a grid outage for up to two days. For its distributed generation, the system uses 2000 solar PV panels installed on the rooftop of the distribution center, in addition to eight wind turbines. Three electrolysers produce the hydrogen, and four fuel cells are commissioned to convert the hydrogen back into electricity – a necessary process due to the intermittent nature of the renewable generation. Figure 20 illustrates the proposed layout of the Cornwall microgrid. (69)

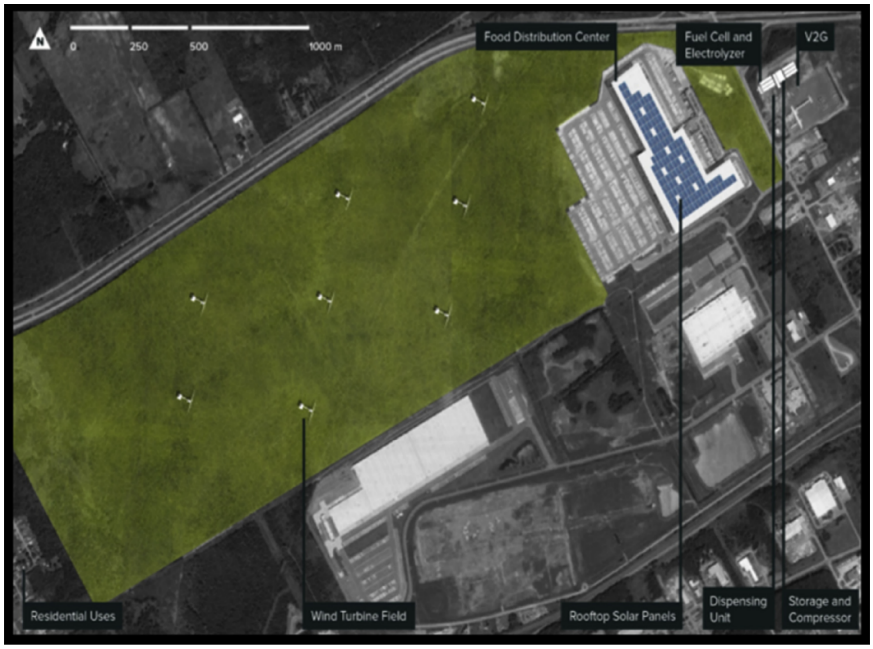

Figure 20: Proposed layout of the microgrid in Cornwall, ON. (69)

The total cost of the system is estimated to be $41.2M. This high cost can be mitigated in several ways. **Firstly, excess hydrogen produced from the electrolysers can be sold into the natural gas grid when prices are high, enabling a form of arbitrage. Excess energy can also be sold back into the larger grid, further reducing the cost**. If concessions are made regarding the backup capability of the system, the cost could be even further reduced by reducing the number of fuel cells (the most expensive components of the entire system). Lastly, government incentives could further encourage the implementation of such a system by lowering the cost even more. (69)

There are microgrid projects currently online in Ontario, including the community microgrid in the Gull Bay First Nation and North Bay's Community Energy Park. The Gull Bay microgrid uses solar panels and battery storage modules to reduce the community's dependency on diesel fuel. (70) The North Bay project is comprised of natural gas turbines and a solar array, providing co-generated heat and power to community spaces such as sporting facilities. (81) Though these microgrids lack hydrogen integration, they can serve as models for further projects in Ontario. The Gull Bay project also demonstrates the viability of microgrid projects for Ontario's remote communities. Hydrogen integration could help to further reduce the reliance of these communities on diesel and other fossil fuels.

A 2016 study by Maroufmashat et al. considers the case of four energy hubs within a local area: a school, a food distribution center, a residential complex, and a hydrogen refueling station. Electricity and natural gas are provided to the hub network through the external grid and hydrogen are produced locally with alkaline electrolysers. As was the case with the Cornwall microgrid, the hydrogen is used to refuel forklifts at the distribution center and FCEVs at the residential complex.

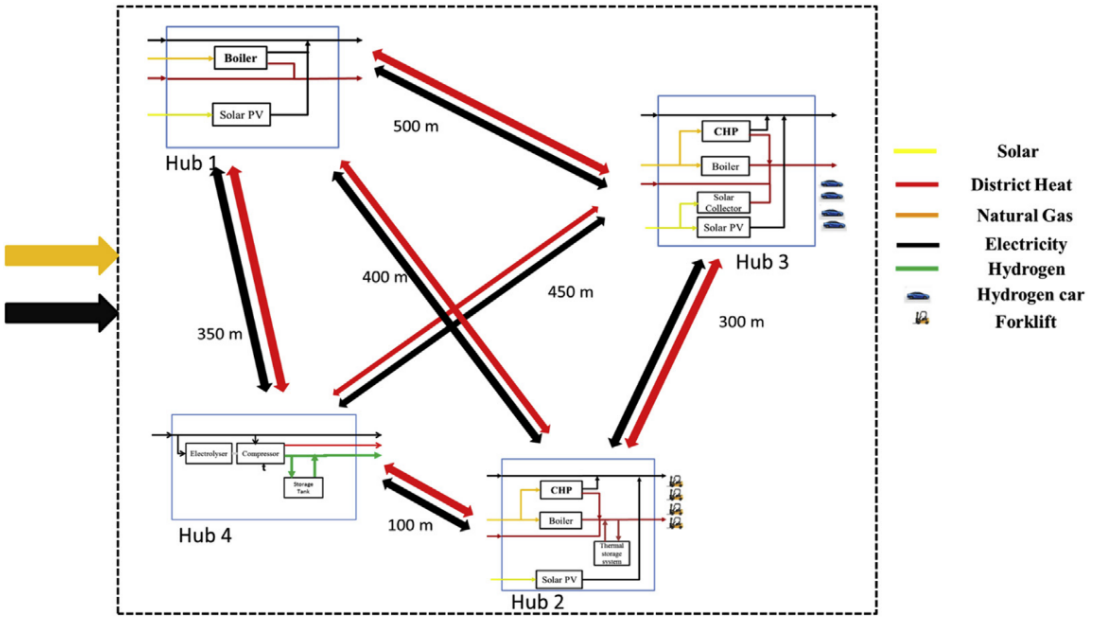

Figure 21: Diagram of energy interactions between hypothetical energy hubs. (71)

Figure 21 shows the energy transfer that takes place between the hubs. Heat and electricity are transmitted directly between buildings, while the hydrogen is transferred as fuel for the vehicles of hubs 2 and 3. The study finds distributed (i.e. on-site) hydrogen production to be advantageous over alternative

methods, such as delivering hydrogen from external sources. Having on-site hydrogen production lowers overall CO_2 emissions of the network, in addition to lowering cost and natural gas consumption. A key advantage of the distributed approach is the ability to produce hydrogen when electricity is cheap and cease production when the electricity price is high. The study also finds cost benefits thanks to the interaction between hubs, as well as a reduction in natural gas consumption. (71) **A method such as this – where the existing natural gas grid is still utilized – is an intelligent way to introduce hydrogen as an energy vector into the economy and encourage uptake of technologies like FCEVs and hydrogen-powered forklifts**. The more hydrogen refueling infrastructure is in place, the less of a nuisance the "chicken and egg" dilemma becomes for wider hydrogen adoption.

HENG could also play a valuable role in energy hubs and microgrids. Using HENG in natural gas applications such as heating and micro-CHP systems would further reduce carbon emissions while achieving energy efficiencies of 63% and 56%, respectively. (23) This would provide an additional avenue through which hydrogen is utilized, on top of the fuel cell-powered vehicles.

Appendix E – Conversion of Class 8 Vehicles

The heavy-duty trucks category includes commercial truck Classes 7 and 8. Class 8 vehicles have a gross vehicle weight rating (GVWR) of greater than 33,001 pounds or 14,969 kilograms and include all tractor-trailers. (82)

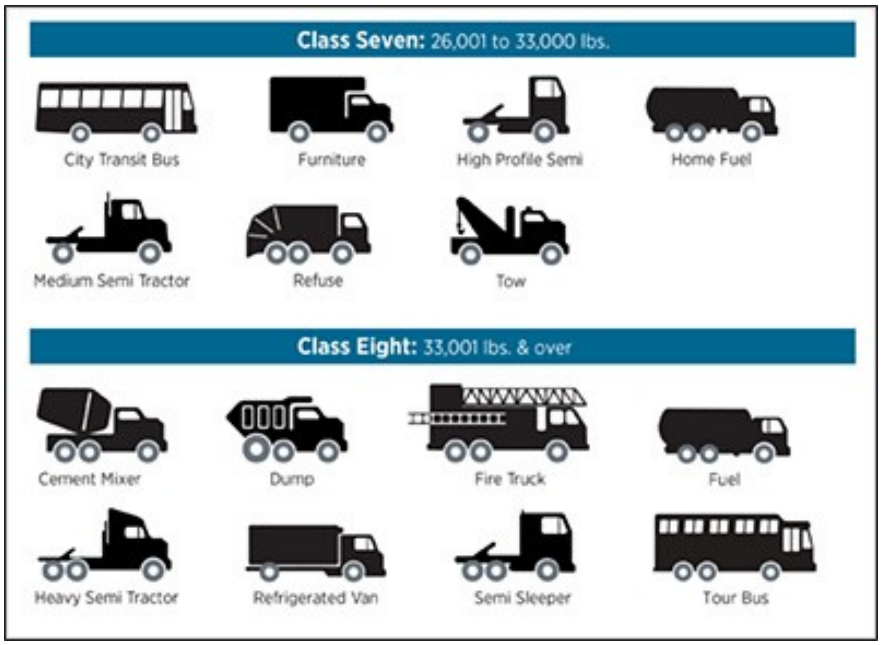

Figure 22: Vehicle classifications. (83)

The transition from diesel Class 8 vehicles to natural gas can certainly be implemented without worrying about any change to the natural gas infrastructure. Vehicles fueled with hydrogen-enriched natural gas produce fewer carbon emissions thanks to the renewable hydrogen content. **Pursuing this path for the Class 8 vehicles category can lead to immediate positive effects with minimal investment cost including avoiding selling energy with a loss to avoid a high amount of global adjustment expenditures in Ontario** (84). Transportation of goods via heavy-duty combination tractor-trailers is common in Canada, which results in tractor-trailers accounting for the largest percentage of vehicle kilometers traveled (VKT) and thus the most fuel consumption and emissions from the heavy-duty vehicle sector. As shown in Figure 24, heavy-duty trucks & rail contribute to around 38% of transportation CO_2 emissions in Canada.

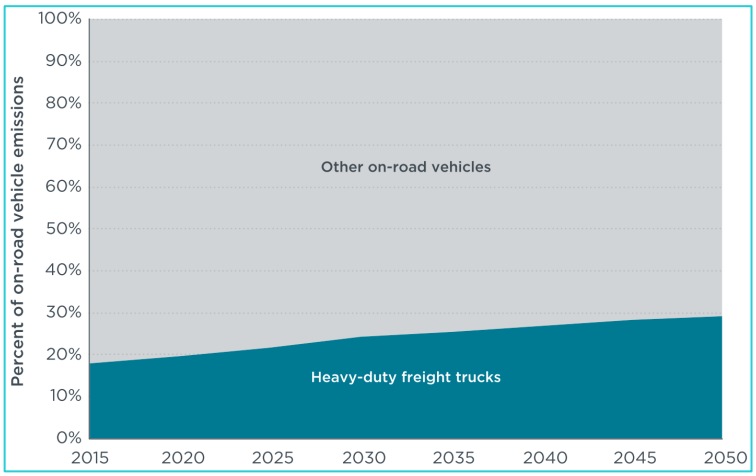

Figure 23: Contribution of tractor-trailers in Canada to total CO_2 emissions from 2015 to 2050 (85)

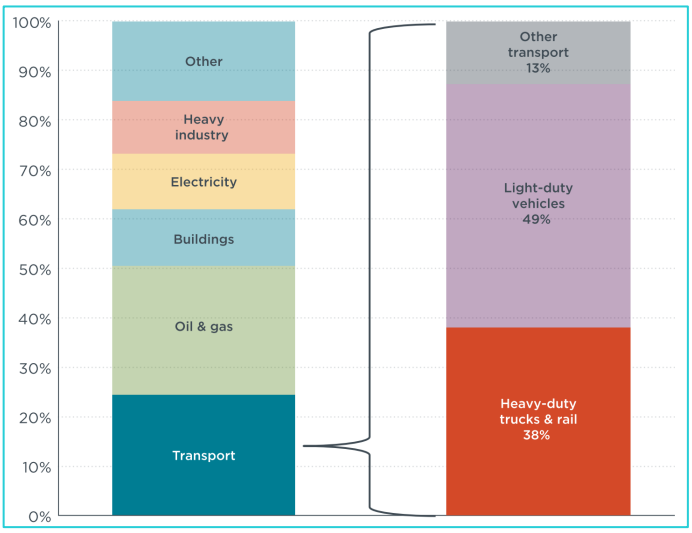

Figure 24: Breakdown of CO_2 emissions in Canada by sector in 2016. (85)

Figure 25 below shows the capital cost comparison between technologies implemented on the tractor-trailer Class 8 vehicles. The figure shows how conventional diesel vehicle costs increase incrementally, but are relatively consistent into future years, as compared with the alternative fuel technologies. For all other technologies, the capital cost drops from 2015 through 2030, resulting in a reduced cost of ownership for such vehicles over time. The zero-emission vehicle technologies show the greatest cost reductions through the same period, with fuel cell technology showing the largest reduction in cost over time, due to the expected drops in fuel cell costs and hydrogen costs**. Hydrogen fuel cell implementation results in around a 15 to 25% reduction in overall costs to own, operate, and fuel compared, to the conventional diesel vehicles in the 2030-time frame.**

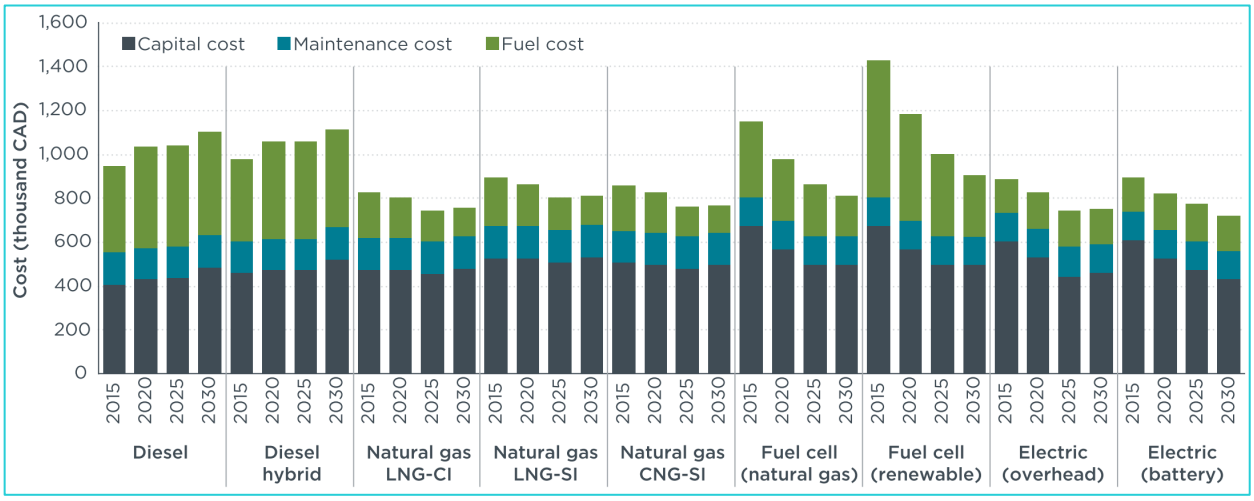

Figure 25: Cost of ownership for each tractor-trailer technology for a vehicle purchased in 2015–2030 broken down by capital cost, maintenance cost, and fuel cost, excluding infrastructure costs (85)

Appendix F - Power to Gas

Adoption of Power-to-Gas as a concept can help produce green hydrogen by utilizing Ontario's electricity grid, powered mostly by CO_2-free sources, during periods of off-peak demand. Besides, P2G can provide an exceptional energy storage technology that is capable of managing the surplus baseload generation and intermittent renewable power issues in Ontario by utilizing the existing natural gas infrastructure to store and distribute electrolytic hydrogen produced from low-cost electricity. (86) As detailed by Eichman et al., the transmission of energy via natural gas pipelines is significantly more efficient than transmission wires. (87)

Efficiency & summarized comparison between P2G pathways

Several studies discuss the multiple P2G pathways and disclose a comparison between their efficiencies. P2G processes are considered cost-intensive with low efficiencies (88) – several studies highlighted an overall Power-to-Gas efficiency of 56%, including the process of methanation. However, if the methanation process is excluded, the efficiency of the P2G chains increases to almost 70%. This means that the P2G process efficiency can increase without hydrogen conversion into synthetic natural gas (SNG), which makes it a technology worth keeping an eye on.

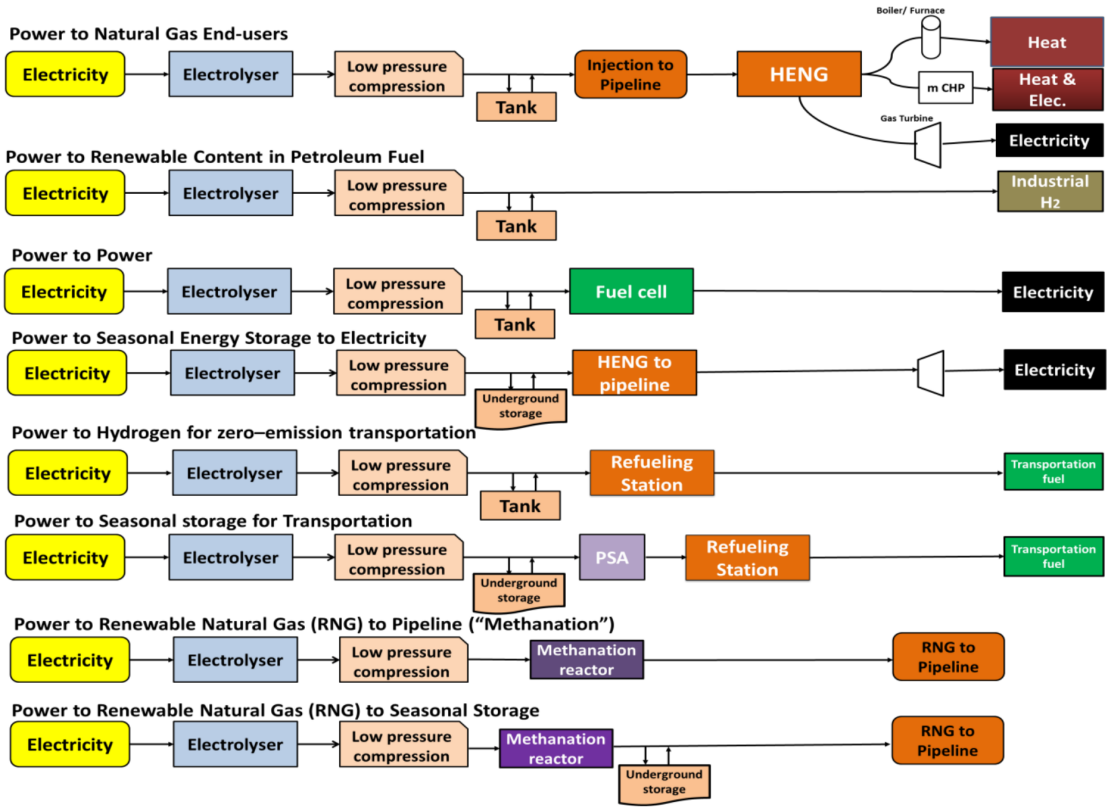

Figure 26: Power-to-gas pathways. (23)

Table 6: Energy efficiency comparison of P2G pathways. (23)

P2G Pathways	Technologies	Current	Long term
Power to Natural Gas End-users	Electrolyser, Low-pressure hydrogen storage/compression, Injection to pipeline	59-83%	64-86%
	…to heat for residential	52-76%	56-79%
	…to micro-CHP	40-72%	55-74%
	…to large scale gas turbines	18-26%	23-31%
Power to Renewable Content in Petroleum Fuel	Electrolyser, Low pressure hydrogen storage/compression	55-83%	59-86%
Power to Power	Electrolyser, Low pressure hydrogen storage/compression, fuel cell	17-40%	27-43%
Power to Seasonal Energy Storage to Electricity	Electrolyser, low-pressure compression, underground storage, Transmission pipelines, Natural gas-based power plants	16-24%	22-29%
Power to Hydrogen for zero-emission transportation	Electrolyser, low-pressure compression, and storage, high-pressure compression for a refueling station	50-79%	54-82%
Power to Seasonal storage for Transportation	Electrolyser, low-pressure compression, underground storage, hydrogen separation technologies, high-pressure compression	36-68%	43-66%
Power to Renewable Natural Gas (RNG) to Pipeline (“Methanation”)	Electrolyser, Low-pressure energy storage, and compression, Methanation reactor, Gas Clean-up, Injection of Renewable Natural Gas to the Natural Gas Pipeline	40-63%	45-65%
Power to Renewable Natural Gas (RNG) to Seasonal Storage	Electrolyser, low-pressure compression, Methanation reactor, Gas Clean-up, Underground storage, Injection of RNG to the Natural Gas Pipeline	34-60%	43-58%

Appendix G – Hydrogen Enriched Natural Gas (HENG) for the Industrial Sector

Implementation of HENG will involve generating hydrogen from surplus power, including renewable energy, and then injecting it into the natural gas pipeline to create hydrogen-enriched natural gas, thereby de-carbonizing natural gas consumption. (89) The combined hydrogen and natural gas can be sent to combined heat and power systems to generate electricity. (90)

According to Penev et al., the HENG process has demonstrated the feasibility of blending hydrogen with natural gas, in amounts up to 10%, without a major effect on the existing natural gas infrastructure. (91) Besides, this pathway of Power-to-Gas technology requires minimal incremental investment and can address the immediate need for energy storage. **Moreover, it can help to reduce the need to "shed" or sell energy for loss which will eventually lead to lower global adjustment expenditures in Ontario.**

Several applications can make use of the HENG process as it has lower CO_2 emissions compared to the use of natural gas solely for production. These applications include:

- Heating, electricity generation, or as a fuel for the transportation sector.
- HENG can be burned in boilers/ furnaces.
- Can be used in micro combined heat and power systems (mCHP) for small-scale applications for residential or industrial purposes.
- After passing a high-pressure compressor, it can be used as a low carbon compressed natural gas (CNG) for transportation.
- HENG can be used for large-scale electricity generation using gas turbines, which have lower emissions compared to purely natural gas. (23)

Limitations

HENG as a process can be limited by several aspects, such as the safety risks associated with blending hydrogen into natural gas, which can increase the risk of ignition. However, this depends on the hydrogen concentration, pipeline types, and material, as well as failure mode conditions. Another concern is the durability of pipeline material. Degradation may occur to the material, especially at a higher pressure and higher concentrations of hydrogen, resulting in blending issues.

Finally, the leakage of hydrogen from the pipeline is also a common concern. Hydrogen is lighter than methane and can leak from pipeline fittings. This issue is related to the permeation rate of hydrogen, which is 4 to 5 times faster than methane. Hydrogen can also permeate more from the wall, rather than the joints. However, the literature suggests that up to 20% of hydrogen in natural gas is needed to observe any increase in significant risks. (92)

Appendix H – Hydrogen Conversion to Products

Hydrogen is a key component in the production process of many products, the chief among them being ammonia, which accounts for 53% of global hydrogen consumption. (66) Hydrogen is used in numerous other processes, including methanol production (which accounts for 10% of global usage), metal alloying, flat glass production, and electronics production. (74)

Currently, 96% of hydrogen gas produced globally is sourced from fossil fuels, with electrolysis occupying the minuscule remaining 4%. More specifically, 48% of hydrogen is sourced from methane, 30% from liquid hydrocarbons, and 18% from coal. A typical steam methane reforming process to produce hydrogen is incredibly carbon-intensive: approximately 11.88 kg of CO_2 is produced per kg of H_2. (19) Naturally, converting fossil fuel-based hydrogen production to electrolysis-based production within these industries presents a tremendous opportunity for the reduction of global carbon emissions.

Power-to-Ammonia (P2A) is a concept that is currently being studied, wherein renewable, electrolytically produced hydrogen is used in the production of ammonia, replacing the SMR processes which currently dominate ammonia production. This ammonia may then be used as a feedstock for fertilizer production (currently the most common application for ammonia), effectively de-carbonizing the final product. Studies on P2A also explore the use of ammonia as an energy storage medium for grid system balancing, as well as an energy vector to transport energy between regions. (75) Ammonia is promising in these applications, thanks to its low storage cost compared to hydrogen (due in part to the ease of liquefaction compared to hydrogen) as well as the maturity and ubiquity of production, storage, and transport infrastructure. Ammonia may be used as a fuel within solid oxide fuel cells or used in reciprocating engines or gas turbines. To avoid NO_x emissions from combustion, the ammonia may be separated into its constituent components, N_2 and H_2, through the use of sodium amide or catalytic cracking, allowing the resultant hydrogen to be combusted instead. (75)

Ikäheimo et al. study the application of P2A in Northern Europe (Scandinavian region, Baltic region, Poland, and Germany), using forecasted energy production and storage costs for the year 2050. The study considers ammonia as a fertilizer feedstock, an energy storage medium, and an energy vector between regions. Ammonia is integrated with the power and heating requirements of the region (see Figure 27), and it is ultimately found that the use of renewable ammonia has minimal impact on overall system costs. (75) In Japan, companies such as IHI Corporation and Chugoku Electric Power are currently investigating dual-fuel power generation schemes where ammonia and fossil fuels are co-fired. In the United States, the Department of Energy's Advanced Research Project Agency-Energy (ARPA-E) is currently investing in projects where renewable energy is converted to carbon-neutral liquid fuels. The majority of these projects focus on ammonia, with one project, in particular, focusing on the use of ammonia in internal combustion engines. (76) A thesis by Hogerwaard investigates the applicability of ammonia as a multi-purpose component within locomotives: serving as a fuel, a hydrogen carrier, a heat recovery/working fluid, and an engine coolant. While not currently cost-effective, the proposed ammonia-based rail system presents benefits concerning GHG and pollutant emissions. (77)

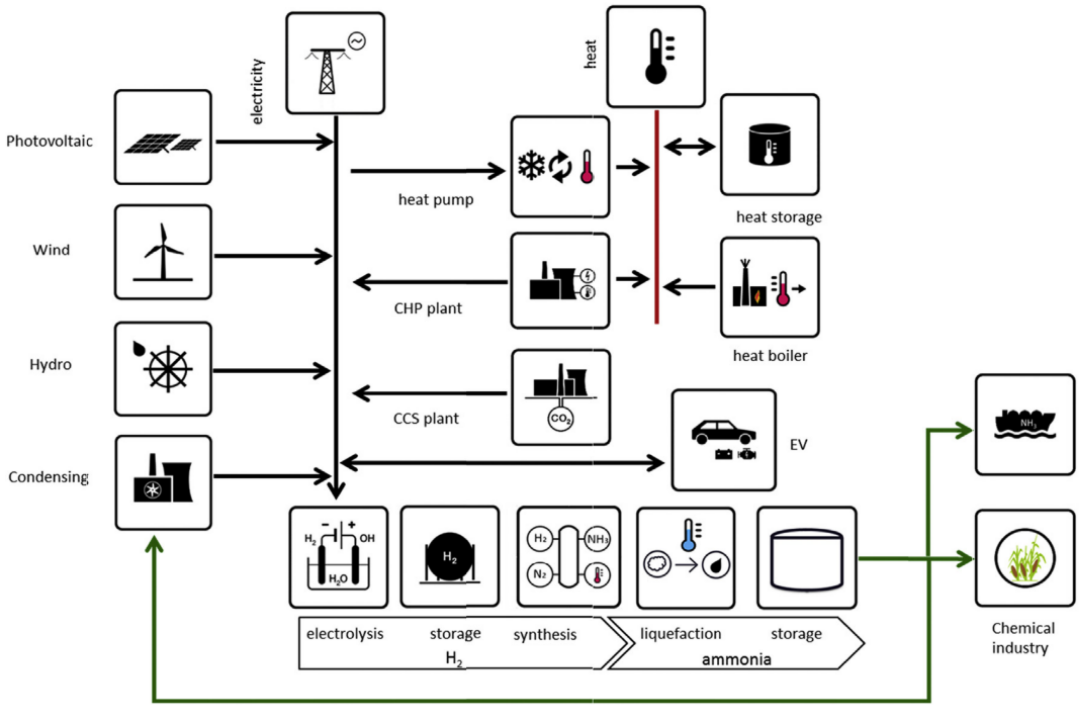

Figure 27: Diagram of ammonia and energy flow in the proposed Power-to-Ammonia system. (75)

Another potential product pathway for renewable hydrogen is Power-to-Methanol (P2M). Methanol is produced by the reaction of hydrogen and carbon monoxide (syngas). An opportunity exists to use renewable, electrolytic hydrogen and captured CO_2 as feedstocks, which would reduce emissions on two fronts. A popular method of achieving P2M is using co-electrolysis, where water and CO_2 are electrolyzed simultaneously using solid oxide electrolysis, a technology discussed in Chapter 2. (93)

Several existing projects demonstrate the feasibility of P2M, such as the George Olah plant in Iceland, which produces 5 million liters of methanol per year using green hydrogen and CO_2 flue gas from a geothermal power plant. A European project, Residual Steel Gases to Methanol (FReSMe), uses CO_2 emissions from steel production to produce methanol, which fuels a ferry in Sweden called the Stena Germanica. (93) In addition to its use as a combustible fuel for engines, methanol can be used in fuel cells, or reformed into hydrogen and used in a hydrogen fuel cell. (93) Methanol is also used in the production of dimethyl ether (DME). DME can be used as a fuel, or as a feedstock in the production of other chemical products, including "short olefins (ethylene and propylene), gasoline, hydrogen, acetic acid, and dimethyl sulfate." (78) Figure 28 illustrates a methanol production scheme using the co-electrolysis of water and captured CO_2.

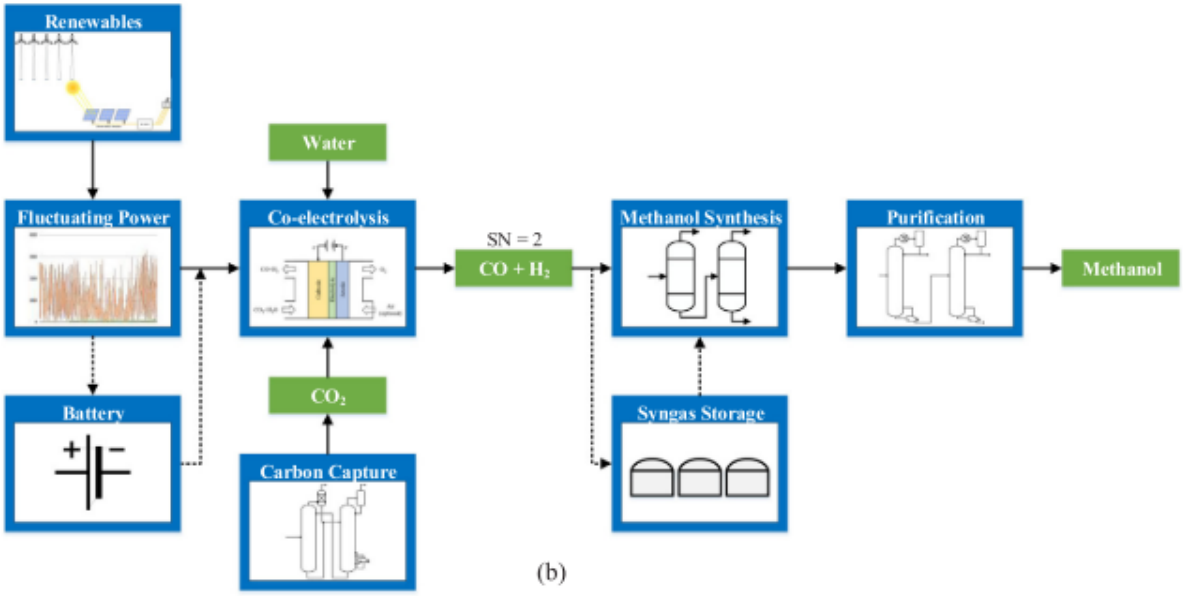

Figure 28: Proposed co-electrolysis process for methanol production. (93)

Appendix I – Seasonal and Underground Storage of Hydrogen

Energy storage technologies are becoming increasingly important with the increased use of renewable energy. One of the technologies that have been discussed in this report is Power-to-Gas and its pathways, in particular the pathways that can provide seasonal energy storage by utilizing both the electrical and natural gas infrastructures. Some of these pathways involve the injection of hydrogen into existing gas infrastructure to create Underground Storage of Hydrogen and Natural Gas (UHNG). By implementing the respective processes hydrogen is either recovered from the mixture as needed for industry or transportation applications, converted to electricity to meet power demand or kept as a mixture of hydrogen-enriched natural gas to serve gas demand. **This technology makes large-scale energy storage more desirable when it comes to energy operators due to its ability to manage excess baseload energy, integrate renewable energy into the grid, and provide long term energy storage**. Specific Power-to-Gas to seasonal energy storage techniques is briefly investigated below. (23)

Power-to-Gas to Seasonal Energy Storage to Electricity

Hydrogen produced from surplus electricity can be stored underground long-term, to be used when needed. Hydrogen storage, along with natural gas storage, can be utilized for electricity generation in large-scale natural gas-based power plants such as gas turbines or combined cycle power plants, or it can be separated from other gases to be consumed in fuel cells for electricity generation. This pathway is an advantageous alternative for properly using wind energy, as it is mostly available in spring and fall in Ontario (when electricity demand is low) for the daily and weekly variation in energy demand, and it is useful for load leveling of baseload nuclear power in Ontario.

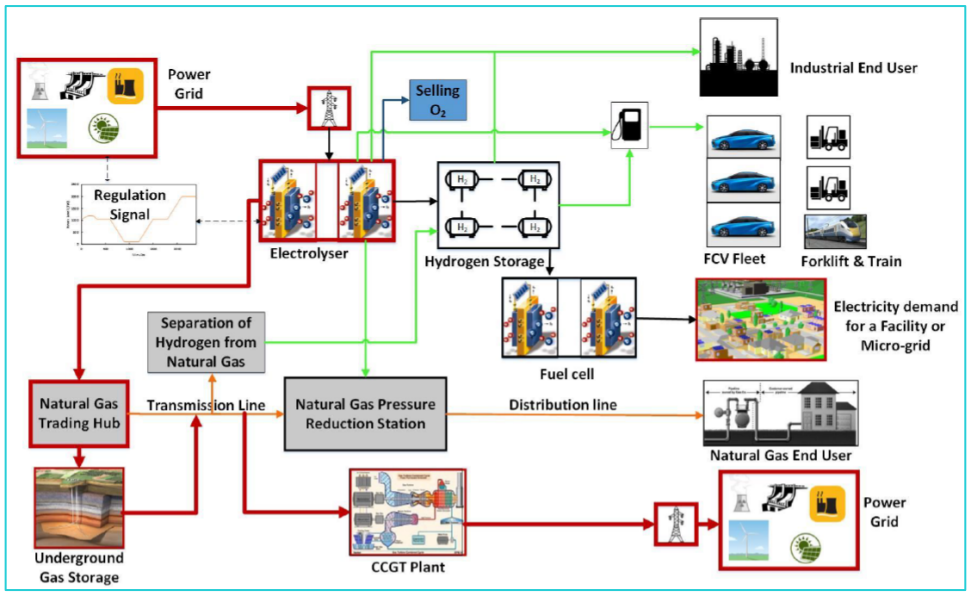

Figure 29: Power to Gas - Seasonal Energy Storage to Electricity.

Power to Seasonal Storage for Transportation Hydrogen

Hydrogen produced from surplus power via an electrolyser can be pressurized and stored in underground storage facilities such as salt caverns or depleted oil and gas reservoirs. This pathway is the same as "Power to Hydrogen for Zero-Emission Transportation" with similar benefits, but an additional benefit is that the hydrogen is generated when intermittent renewable energy is plentiful, i.e., spring and fall in Ontario, and used year-round in transportation applications. As such, this pathway is a long-term application where there is very high penetration of wind energy or high penetration of baseload nuclear, and large capacities of seasonal energy storage are required.

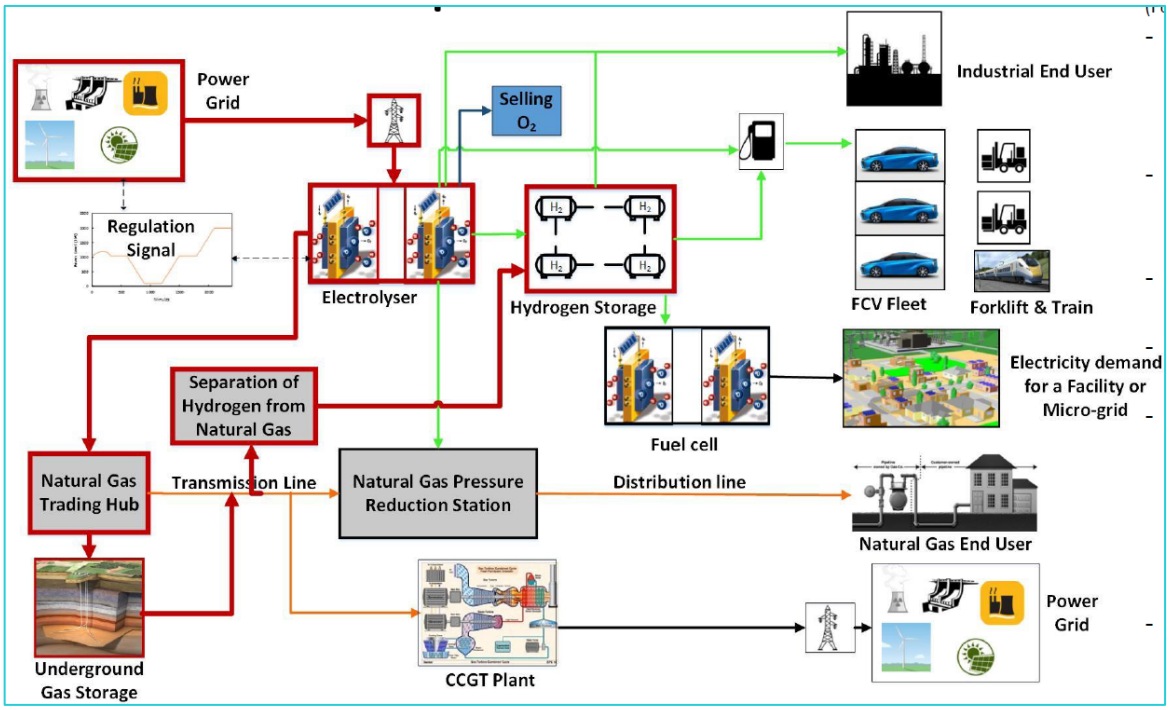

Figure 30: Power to Seasonal Transportation (2050 and beyond). (94)

Power to Renewable Natural Gas (RNG) to Seasonal Storage

Once renewable methane (RNG) is produced from surplus electricity, it can be stored for extended periods in underground storage and utilized when needed. (95)

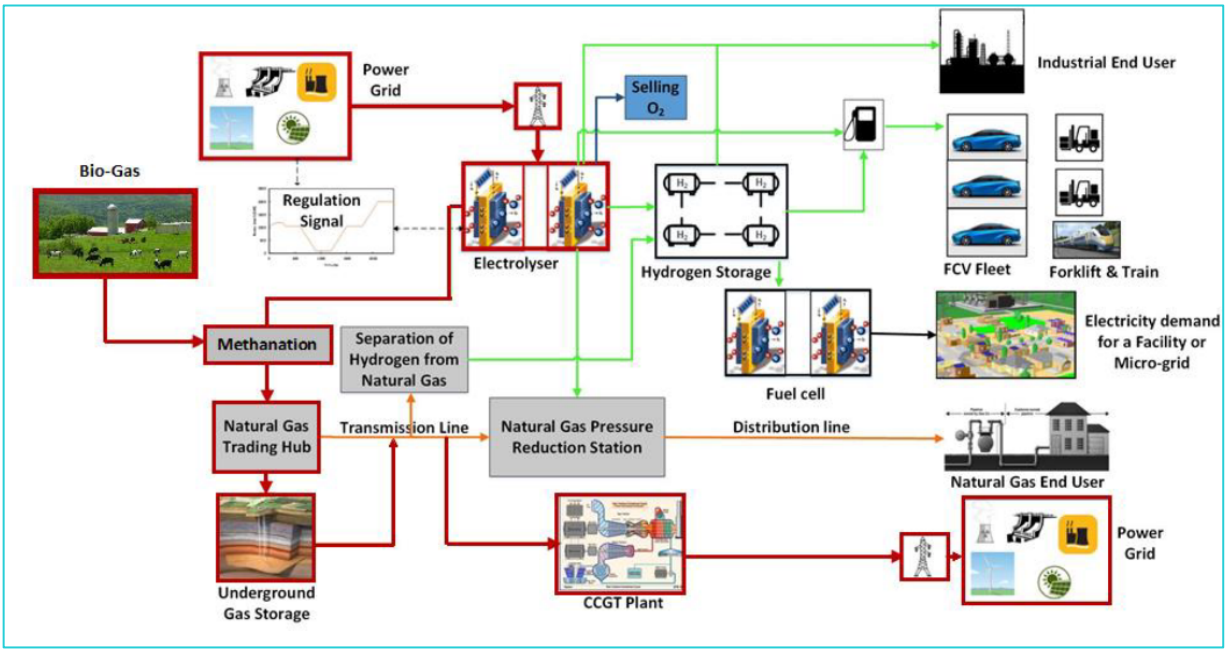

Figure 31: Power to Renewable Natural Gas (RNG) to Seasonal Storage. (96)

Several studies highlighted the importance of energy storage in the upcoming economic transfer into the hydrogen economy.

A 2016 study by Peng et al. noted the most desirable pathway for the energy storage and recovery sector is when hydrogen is injected into the reservoir along with natural gas and is distributed to off-site users. Their analysis also illustrates that existing natural gas storage practices are driven by variations in the demand for natural gas. (97)

In 2017, Maroufmashat & Fowler reported the impact of considering the several storage technologies on a long term basis. (98) The Levelized cost of the product for hydrogen is around 17-29 cents per kWh, while in the long-term the cost will be as low as 4-5 cents per kWh. The reason is that the price of storage technologies will be decreased significantly in the long-term. Seasonal storage can increase cost and lower efficiency; however, it can be a bridge between electricity, natural gas, and transportation systems.

Another study was conducted to analyze the economic aspects of large-scale hydrogen storage for renewable utility applications (99). The study concluded that hydrogen energy storage is an ideal match for renewables of all scales, especially large-scale wind. Also, underground storage allows more capacity and competitive cost for hydrogen storage compared to other processes. The study also highlighted the impact of opening more market opportunities that are needed for the development of the entire energy storage sector.